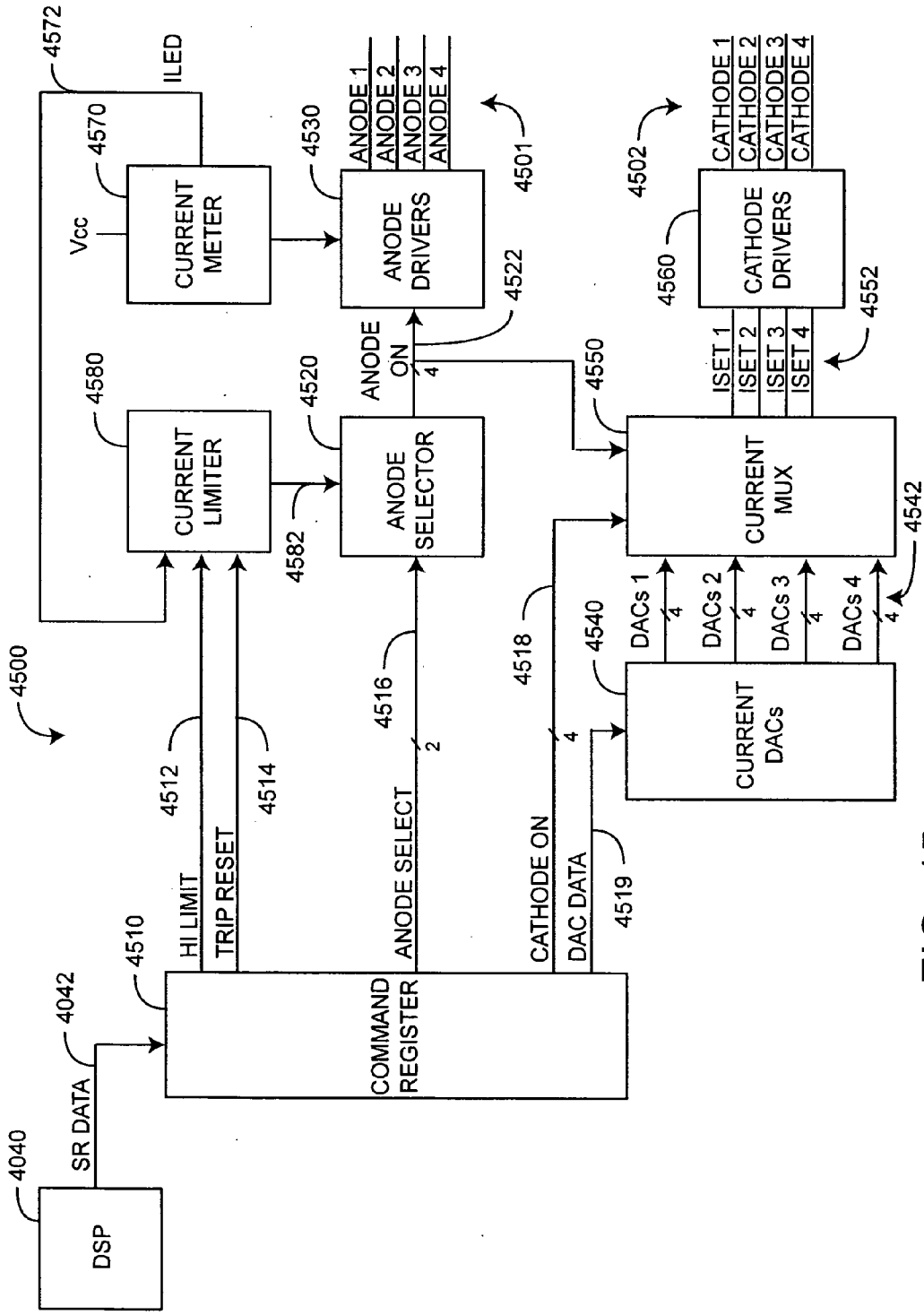
4572
ILED
4570
Vcc
CURRENT METER
4530
ANODE 1
ANODE 2
ANODE 3
ANODE 4
ANODE DRIVERS
4501
4502
CATHODE 1
CATHODE 2
CATHODE 3
CATHODE 4
CATHODE DRIVERS
4560
4552
4522
ANODE ON
4580
CURRENT LIMITER
4520
ANODE SELECTOR
4550
ISET 1
ISET 2
ISET 3
ISET 4
CURRENT MUX
4542
4582
4500
4518
4516
4540
DACs 1
DACs 2
DACs 3
DACs 4
CURRENT DACs
4512
4514
HI LIMIT
TRIP RESET
ANODE SELECT
CATHODE ON
DAC DATA
4519
4510
COMMAND REGISTER
4042
SR DATA
4040
DSP

FIG. 45