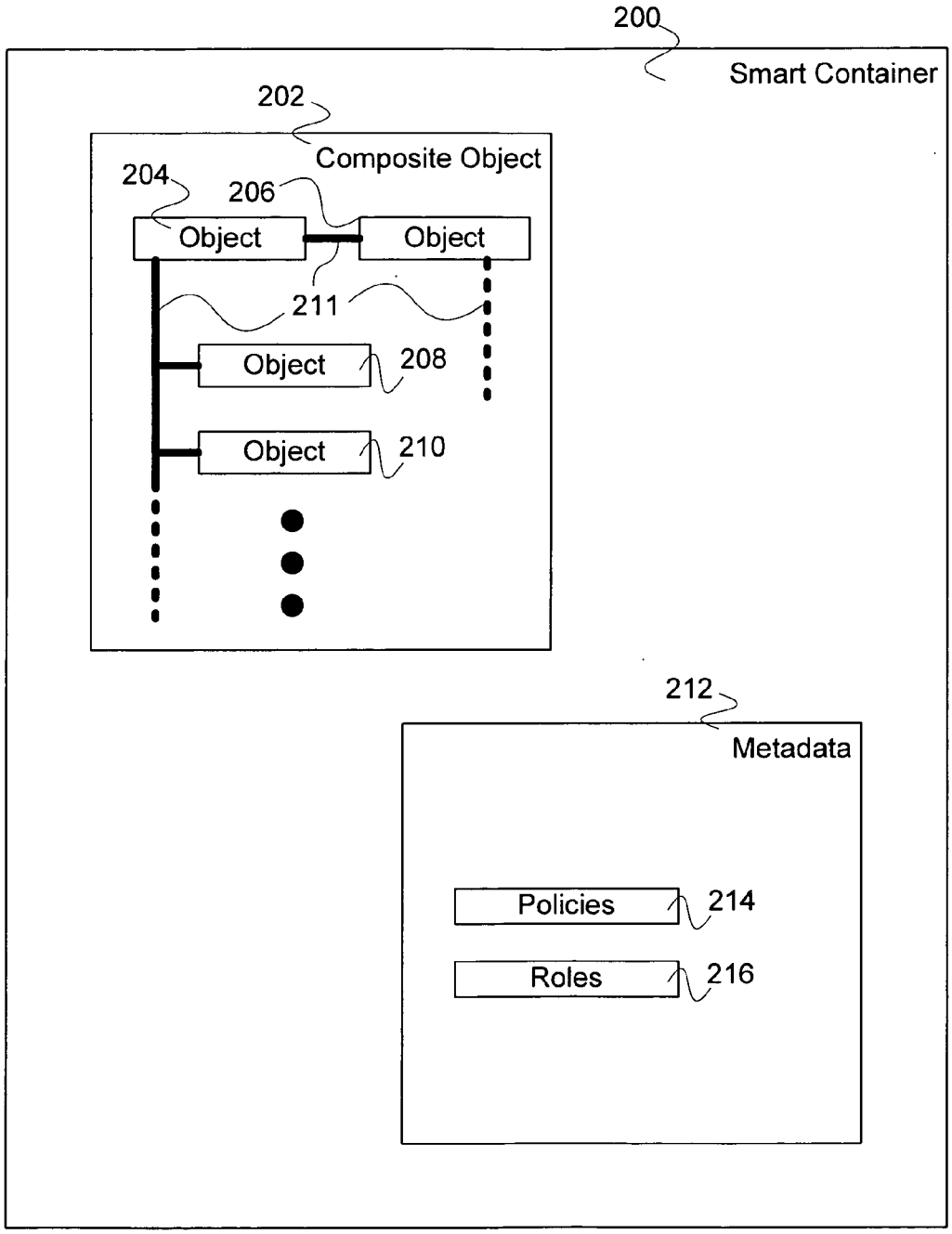
200
Smart Container
202
Composite Object
204
206
Object
Object
211
Object
208
Object
210
212
Metadata
Policies
214
Roles
216

FIG. 2