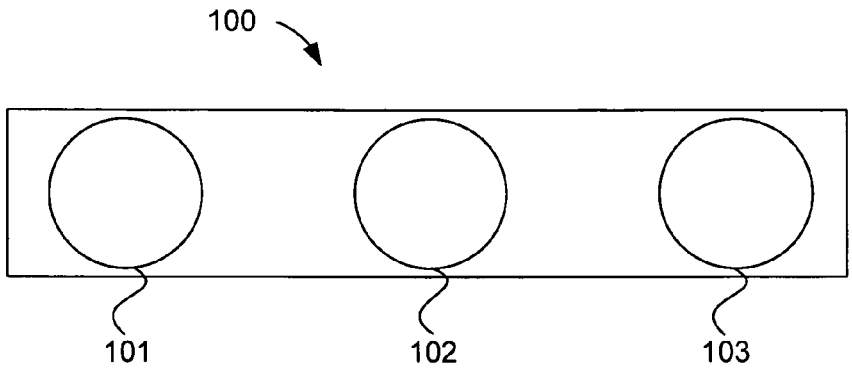
100
101
102
103

FIG. 1A

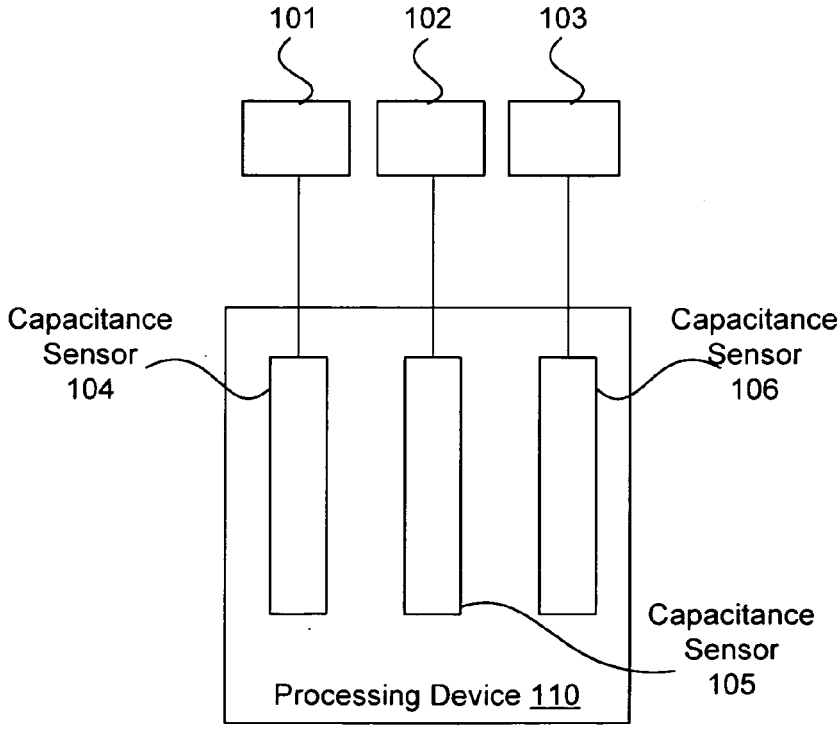
101
102
103
Capacitance Sensor 104
Capacitance Sensor 106
Capacitance Sensor 105
Processing Device 110

FIG. 1B