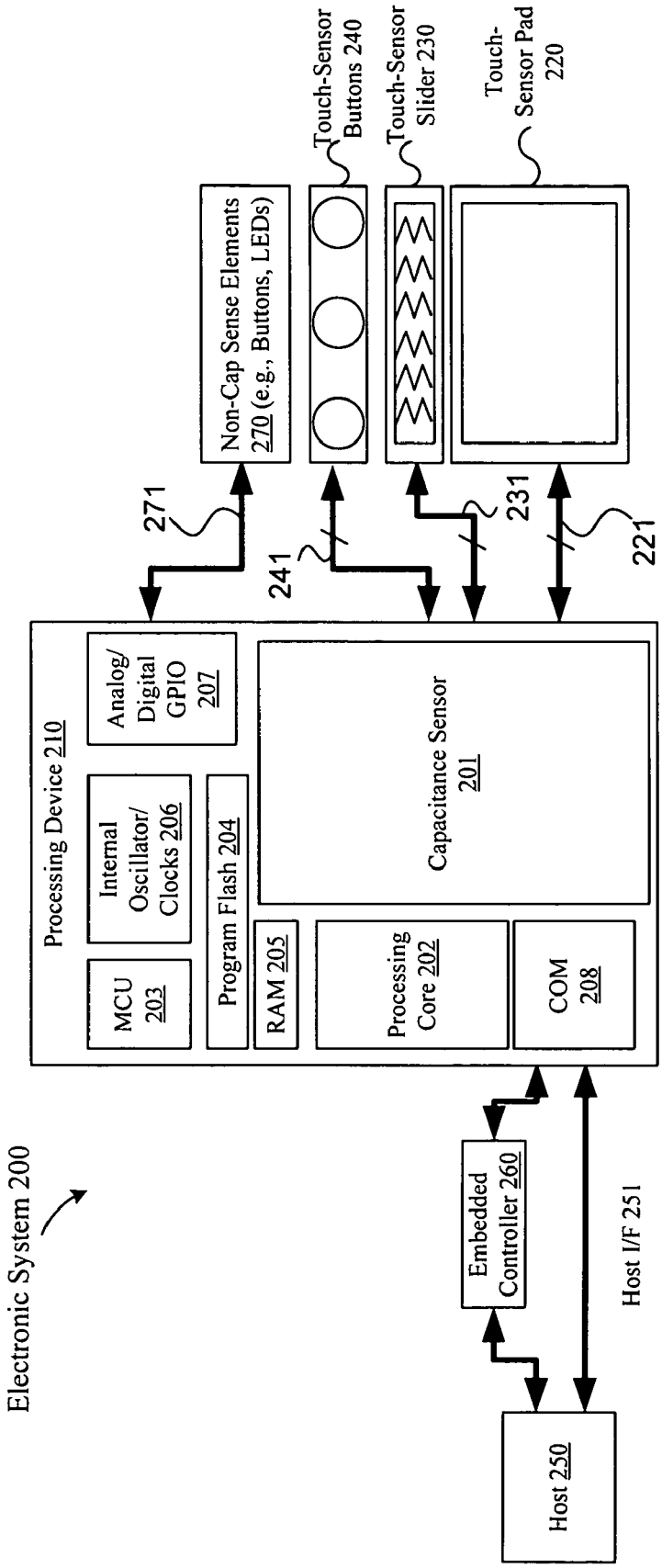
Electronic System 200
Processing Device 210
MCU 203
Internal Oscillator/ Clocks 206
Analog/ Digital GPIO 207
Program Flash 204
RAM 205
Processing Core 202
Capacitance Sensor 201
COM 208
Embedded Controller 260
Host 250
Host I/F 251
271
241
231
221
Non-Cap Sense Elements 270 (e.g., Buttons, LEDs)
Touch-Sensor Buttons 240
Touch-Sensor Slider 230
Touch-Sensor Pad 220

FIG. 2