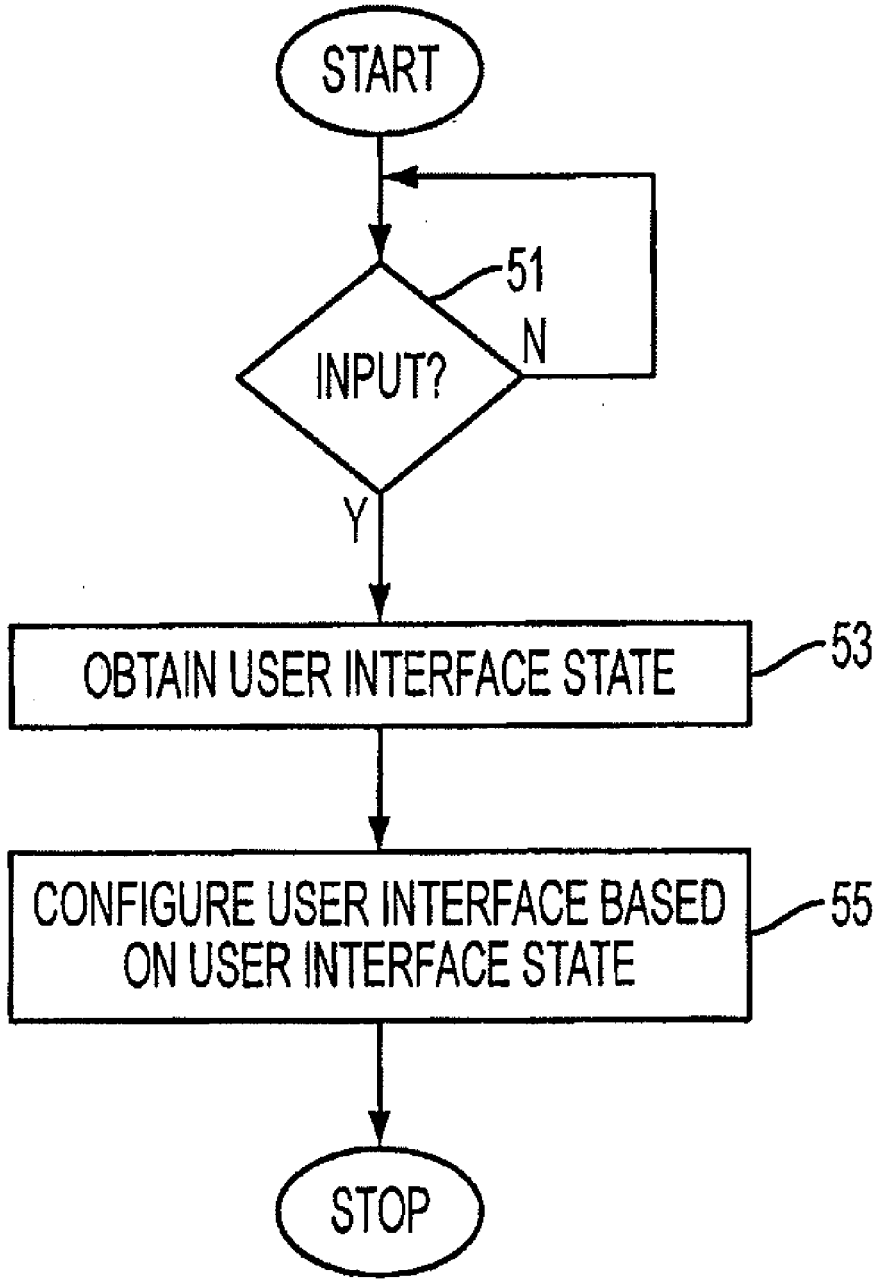
START
51
INPUT?
N
Y
OBTAIN USER INTERFACE STATE
53
CONFIGURE USER INTERFACE BASED ON USER INTERFACE STATE
55
STOP

FIG. 5