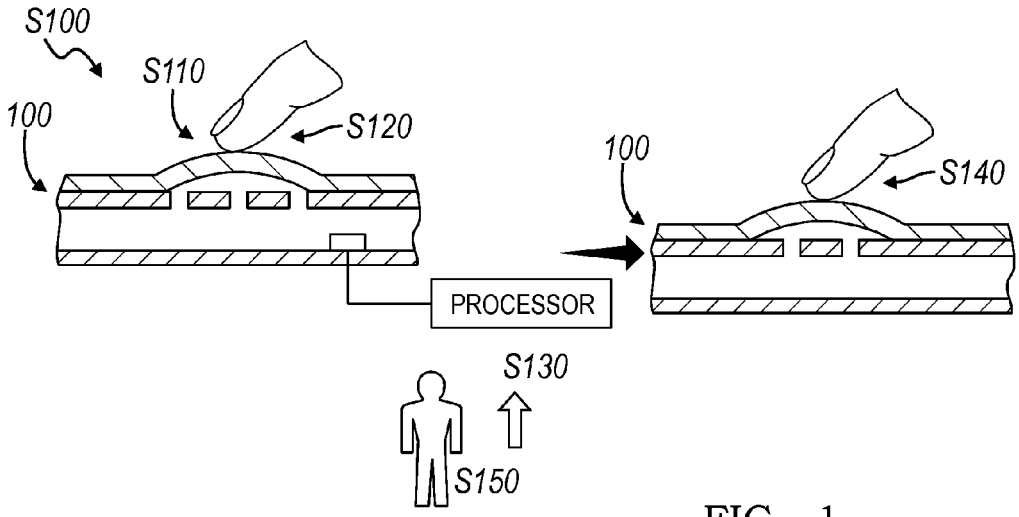
S100
S110
100
S120
PROCESSOR
100
S140
S130
S150

FIG. 1

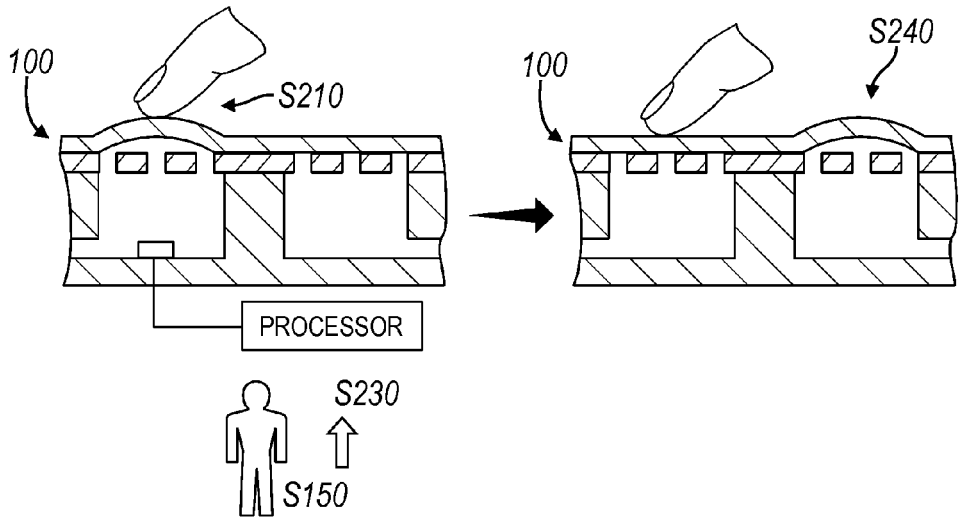
100
S210
PROCESSOR
100
S240
S230
S150

FIG. 2