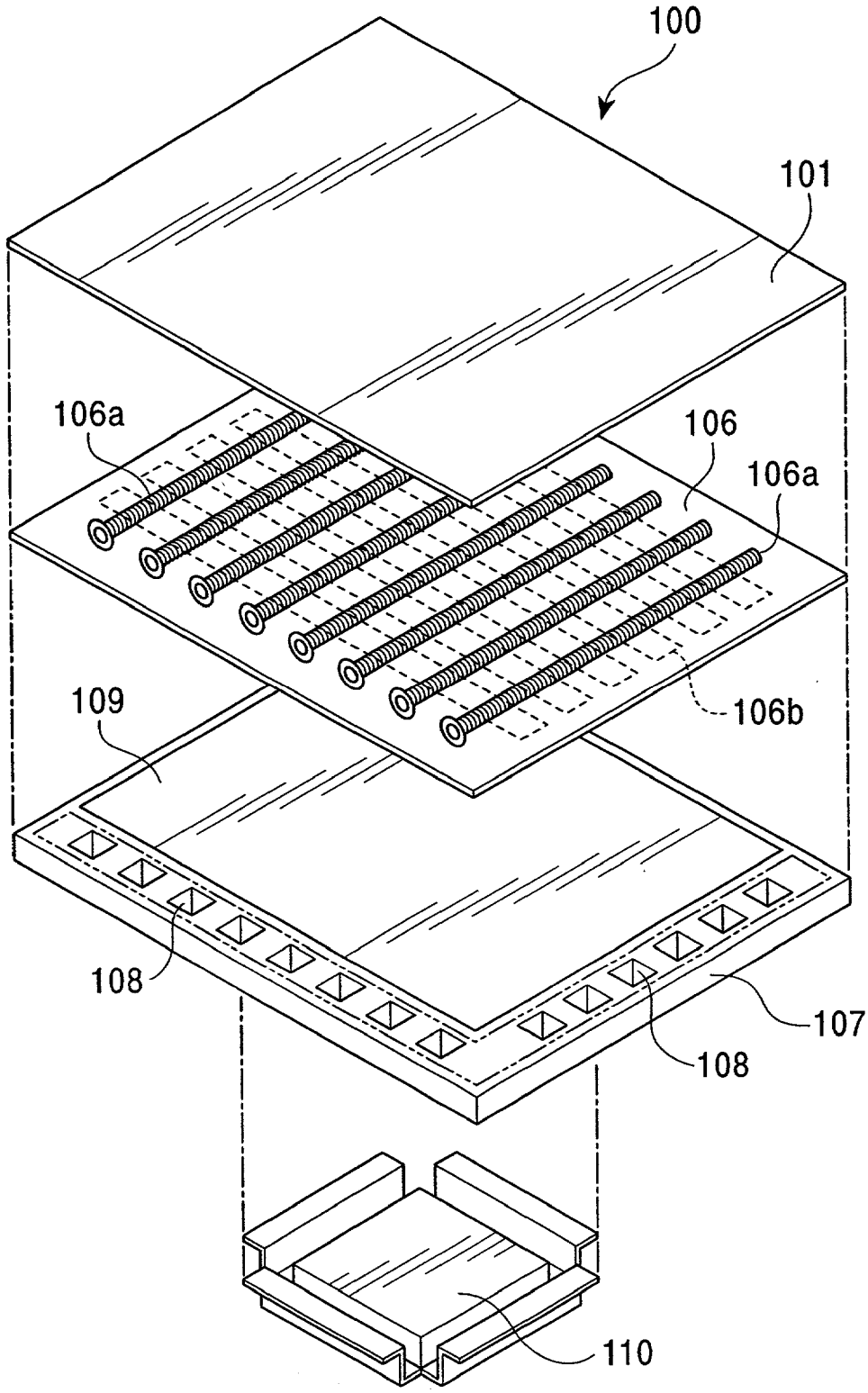FIG. 7
PRIOR ART