US 20030086410A1

(19) United States

(12) Patent Application Publication

(10) Pub. No.: US 2003/0086410 A1

(43) Pub. Date: May 8, 2003

Eikkula

(54) PROVIDING A NETWORK NODE WITH SERVICE REFERENCE INFORMATION

(76) Inventor: **Jari Eikkula**, Espoo (FI)

Correspondence Address:
PILLSBURY WINTHROP, LLP
P.O. BOX 10500
MCLEAN, VA 22102 (US)

(21) Appl. No.: **09/835,821**

(22) Filed: **Apr. 17, 2001**

Publication Classification

(51) **Int. Cl.**[7] **H04L 12/66**

(52) **U.S. Cl.** **370/352**; 370/410

(57) **ABSTRACT**
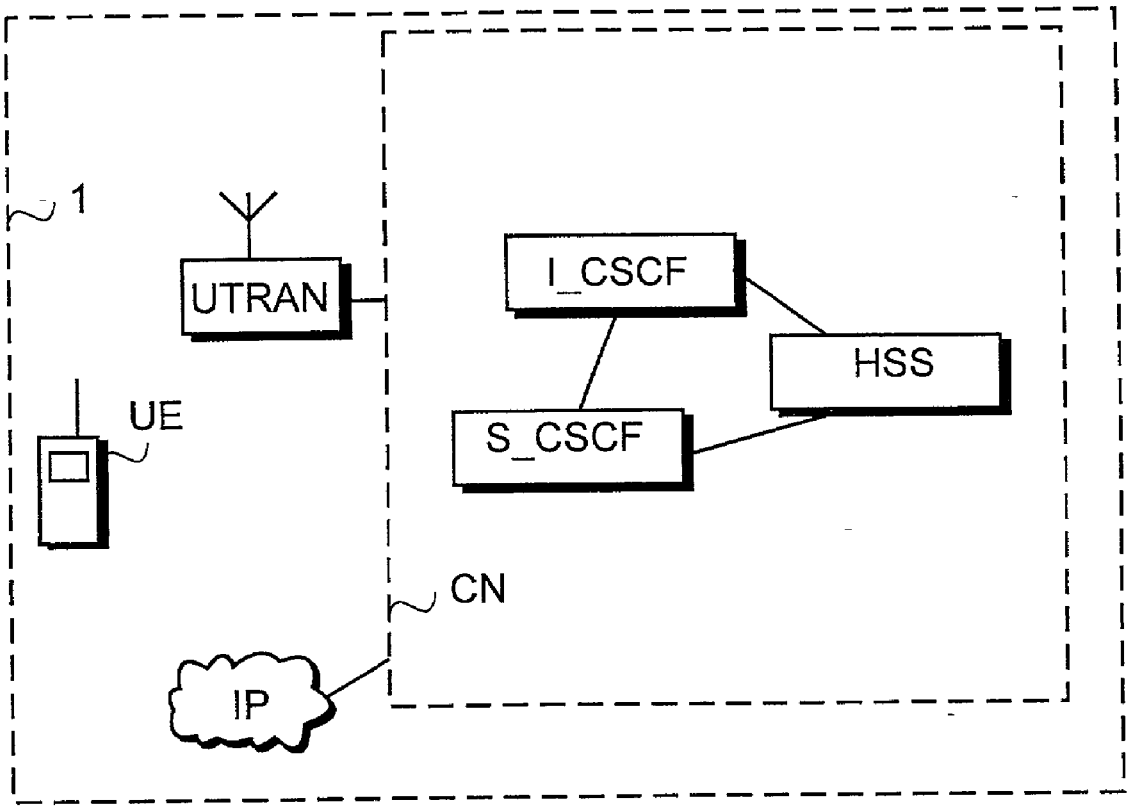
In order to provide a network node using an IP telephony signalling protocol, such as SIP, with service reference information needed for billing purposes, for example, the service reference information is added to an IP telephony signalling protocol message and the IP telephony signalling protocol message is then sent to the network node.