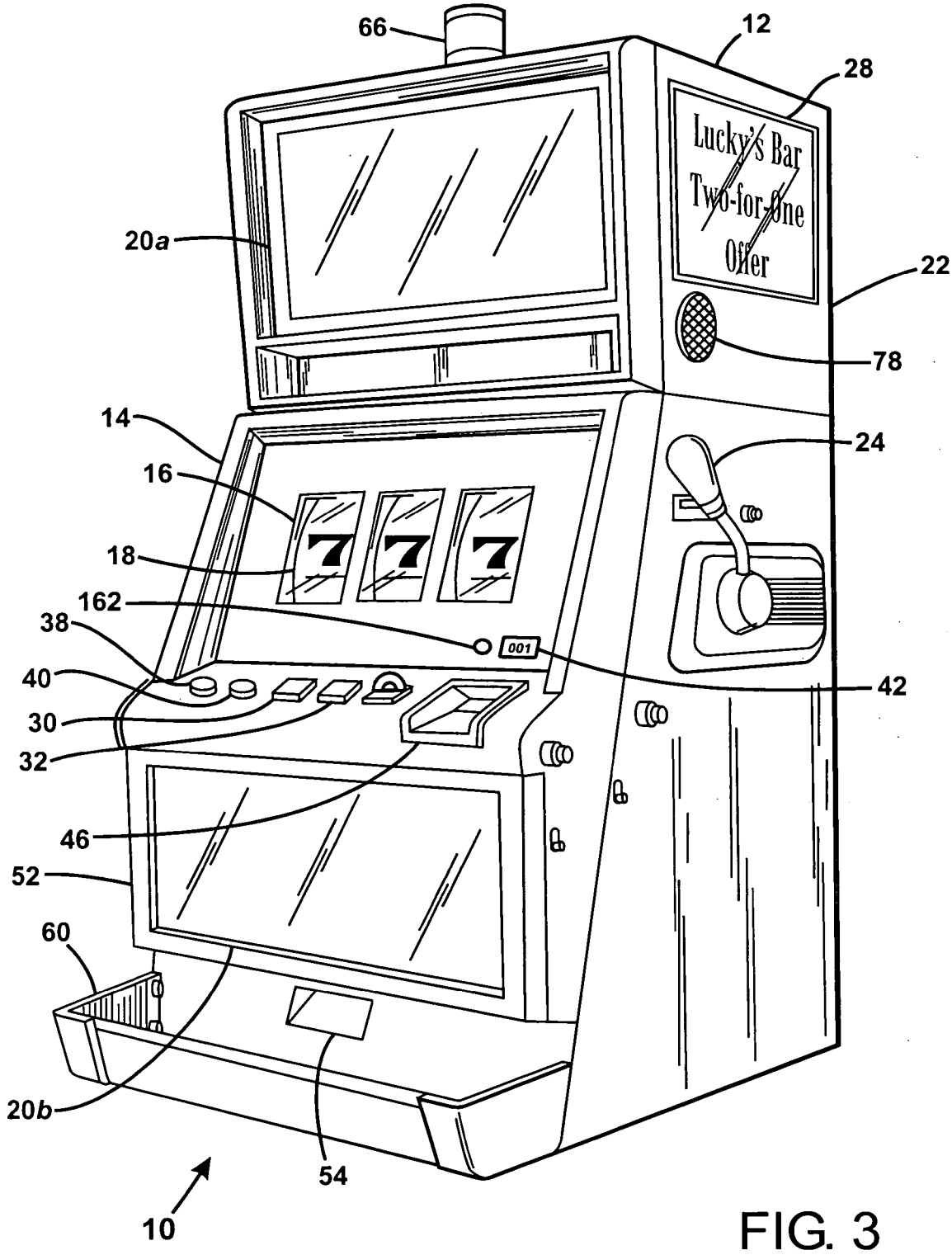
66
12
28
Lucky's Bar
Two-for-One
Offer
20a
22
78
14
24
16
18
162
38
40
42
30
32
46
52
60
20b
54
10

FIG. 3