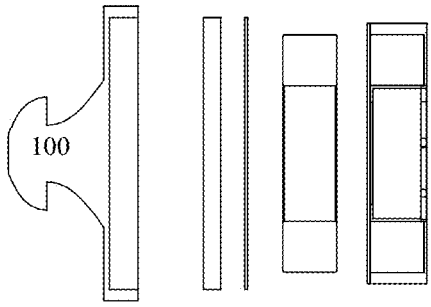

Figure 12