US 20160323010A1

(19) United States

(12) Patent Application Publication

(10) Pub. No.: US 2016/0323010 A1

(43) Pub. Date: Nov. 3, 2016

Wu et al.

(54) METHODS AND APPARATUS FOR MITIGATION OF RADIO-FREQUENCY IMPAIRMENTS IN WIRELESS NETWORK COMMUNICATION

(71) Applicant: **Nokia Technologies Oy**, Espoo (FI)

(72) Inventors: **Peizhi Wu**, San Diego, CA (US); **Durgaprasad Shamain**, San Jose, CA (US)

(73) Assignee: **Nokia Technologies Oy**

(21) Appl. No.: **14/698,088**

(22) Filed: **Apr. 28, 2015**

Publication Classification

(51) **Int. Cl.**
H04B 1/44 (2006.01)
H04L 25/02 (2006.01)

(52) **U.S. Cl.**
CPC ***H04B 1/44*** (2013.01); ***H04L 25/0204*** (2013.01); *H04B 2001/485* (2013.01)

(57) **ABSTRACT**
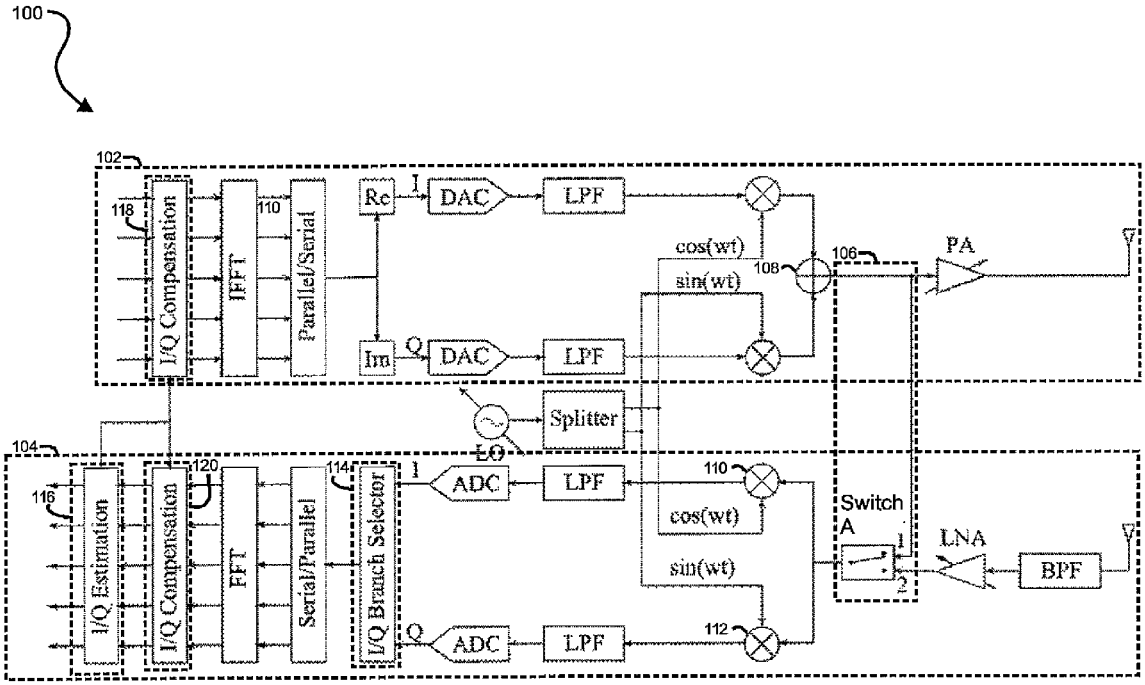
Systems and techniques for in-phase/quadrature estimation are described. Reference signals are configured and used to perform in-phase and quadrature estimation of a transmitter of a transceiver. Compensation is then performed on the transmitter and the fully-compensated transmitter is used to provide reference signals for in-phase and quadrature estimation of the receiver, and receiver compensation is performed.