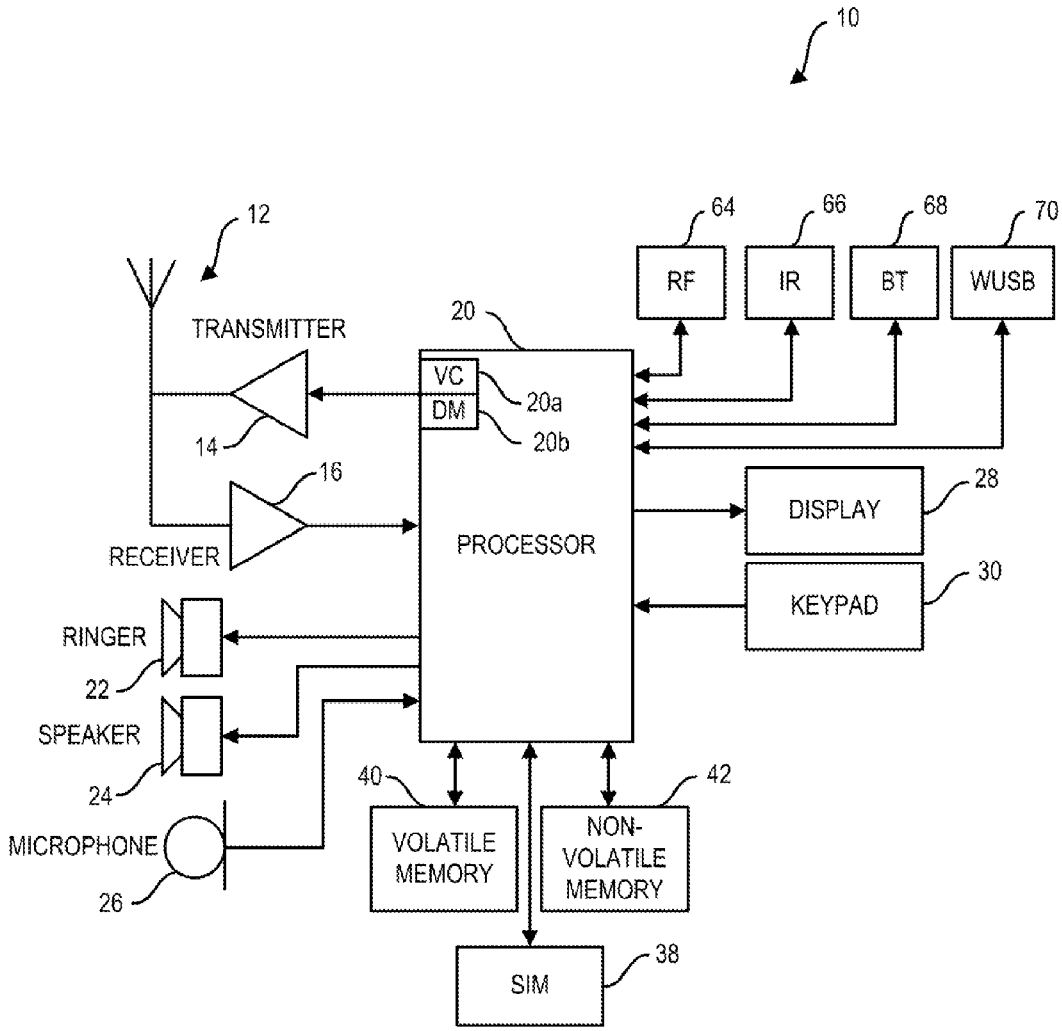
10
12
TRANSMITTER
14
16
RECEIVER
20
VC
DM
20a
20b
PROCESSOR
64
66
68
70
RF
IR
BT
WUSB
DISPLAY
28
KEYPAD
30
RINGER
22
SPEAKER
24
MICROPHONE
26
40
VOLATILE MEMORY
42
NON-VOLATILE MEMORY
SIM
38

FIG. 4