US 20050130611A1

(19) United States

(12) Patent Application Publication

(10) Pub. No.: US 2005/0130611 A1

(43) Pub. Date: Jun. 16, 2005

LU et al.

(54) THE INTEGRATED COMMUNICATION TERMINAL FOR NEXT GENERATION MOBILE TELECOMMUNICATIONS

(76) Inventors: **WEI LU**, CUPERTINO, CA (US); **JIANHONG HU**, CUPERTINO, CA (US)

Correspondence Address:
WEI LU
1218 BUBB RD
CUPERTINO, CA 95014 (US)

(21) Appl. No.: **10/904,422**

(22) Filed: **Nov. 10, 2004**

Publication Classification

(51) **Int. Cl.**[7] **H04B 1/00**

(52) **U.S. Cl.** **455/130**

(57) **ABSTRACT**

An advanced communication terminal system of integrating mobile communications, wireless access systems and wireline communications into one open architecture platform supporting cost-effective broadband services in both wireless and wired communication environment with one integrated terminal device in order to maximize the wireless spectrum utilization and optimize the network resource management.

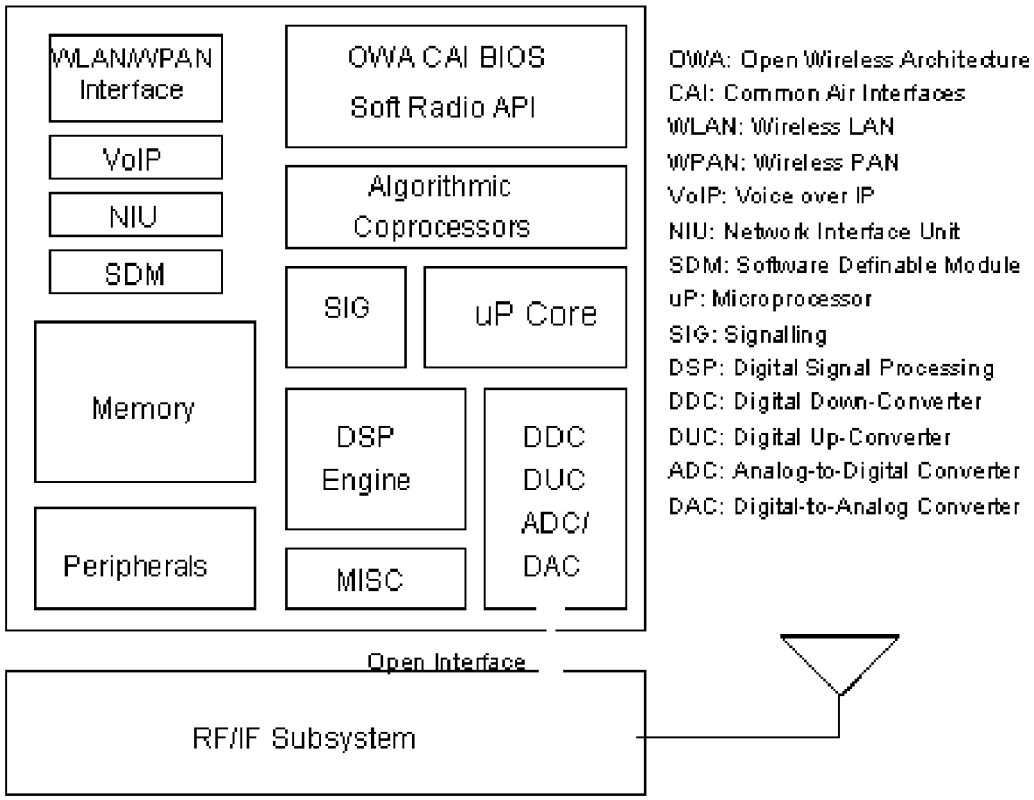

Hardware Architecture of Integrated Wired and Wireless Mobile Terminal