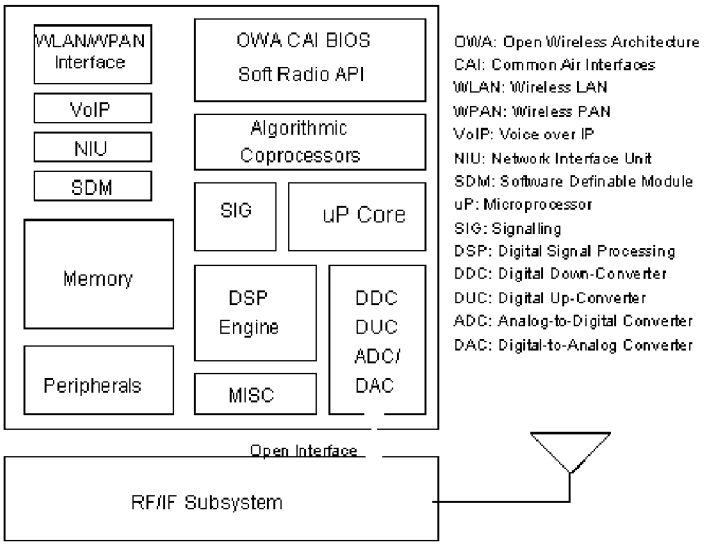

Hardware Architecture of Integrated Wired and Wireless Mobile Terminal

FIG. 1

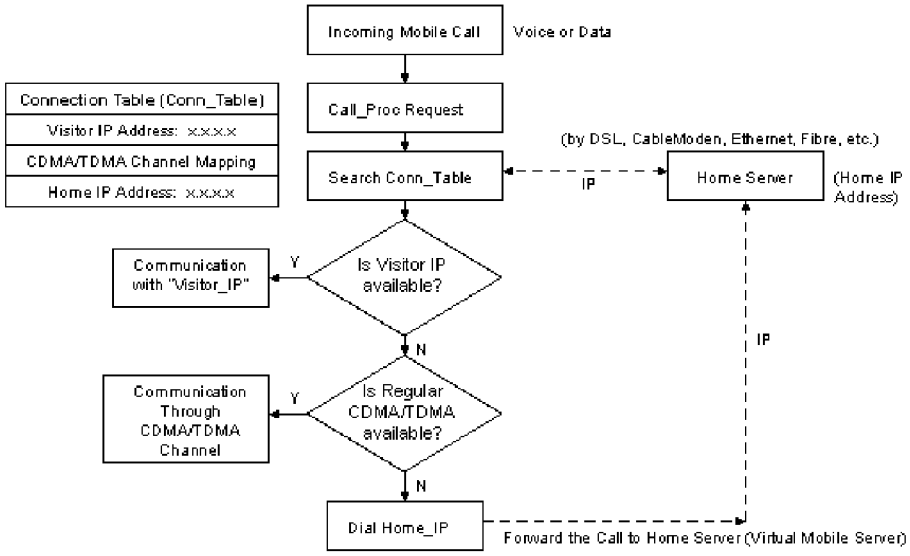

Call Processing Management System in Mobile Switching Center or Gateway

FIG. 2