FIG. 6

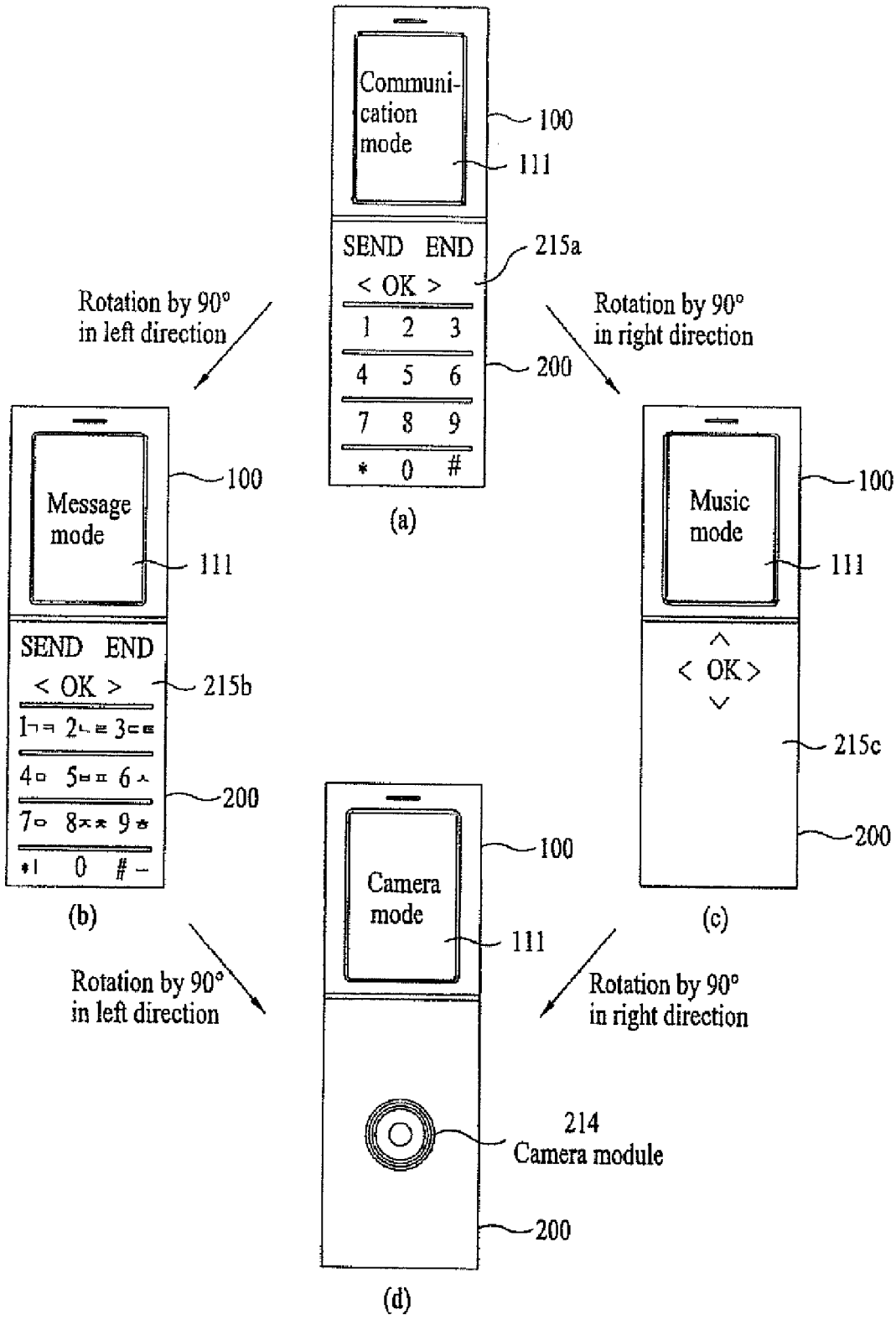
Communi-
cation
mode
100
111
SEND END
< OK >
215a
1 2 3
4 5 6
200
7 8 9
* 0 #
(a)
Rotation by 90°
in left direction
Rotation by 90°
in right direction
Message
mode
100
111
SEND END
< OK >
215b
200
(b)
Music
mode
100
111
< OK >
215c
200
(c)
Camera
mode
100
111
214
Camera module
200
(d)
Rotation by 90°
in left direction
Rotation by 90°
in right direction