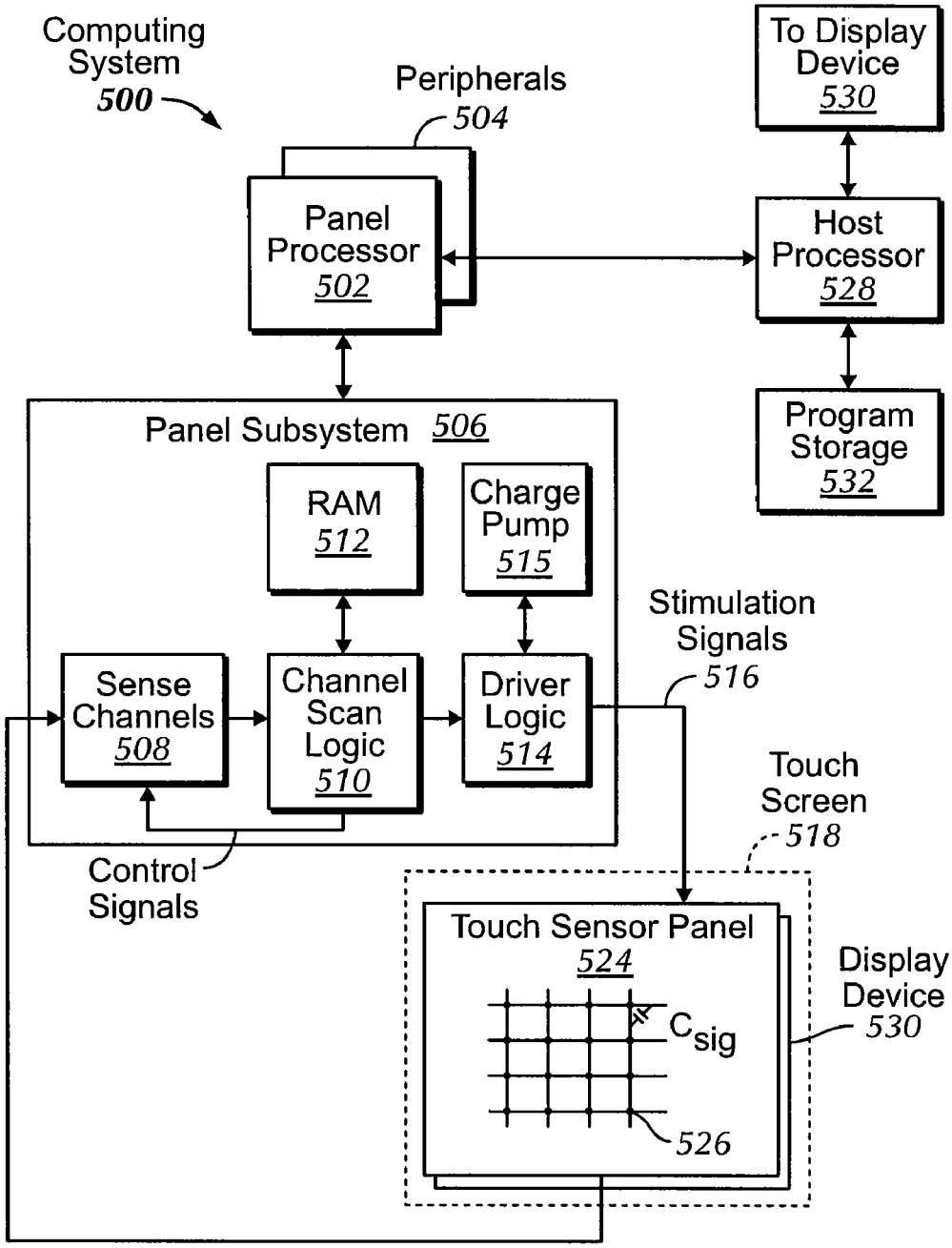
Computing System
500
Peripherals
504
Panel Processor
502
To Display Device
530
Host Processor
528
Program Storage
532
Panel Subsystem 506
RAM
512
Charge Pump
515
Sense Channels
508
Channel Scan Logic
510
Driver Logic
514
Stimulation Signals
516
Touch Screen
518
Control Signals
Touch Sensor Panel
524
Csig
526
Display Device
530

FIG. 5