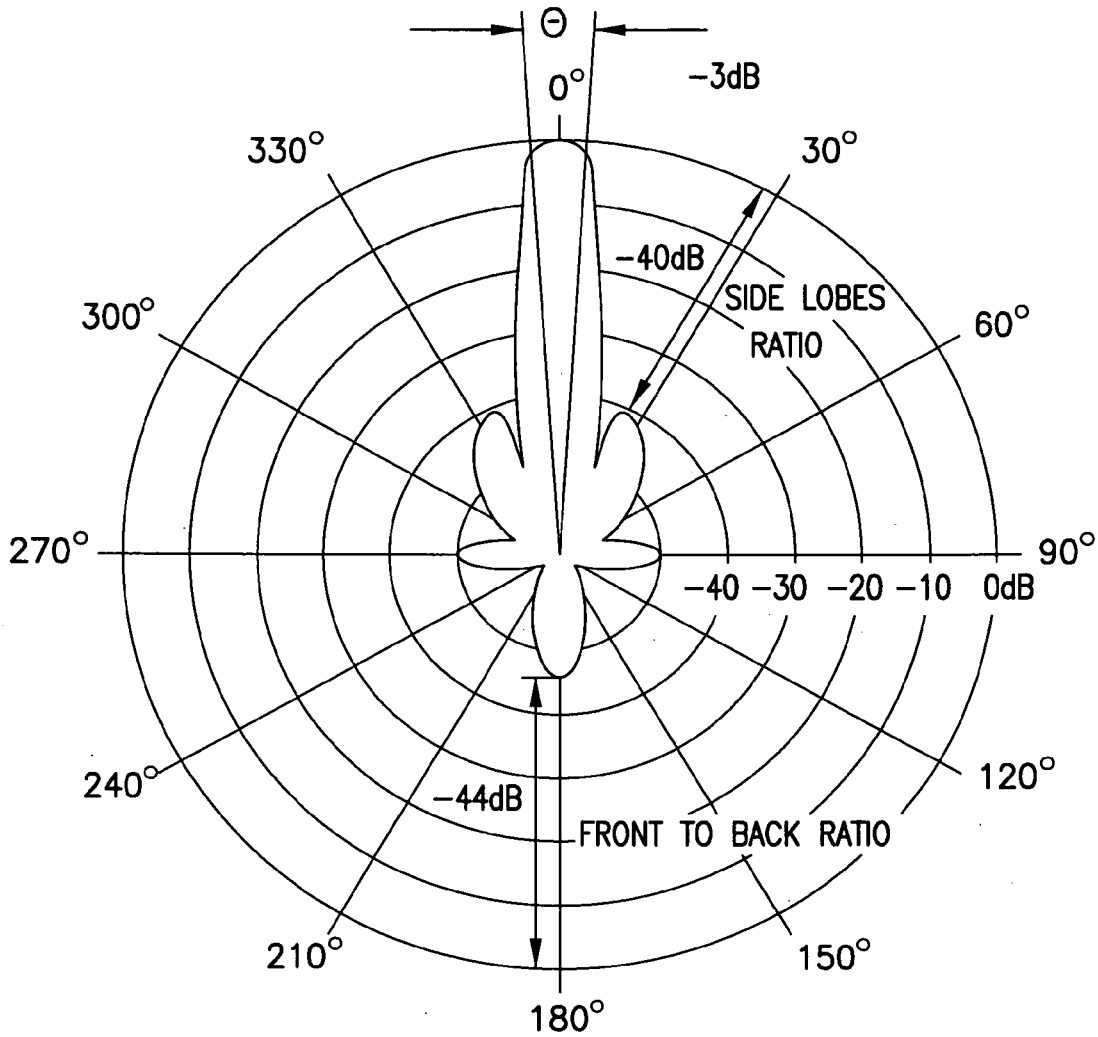
Θ
0°
-3dB
330°
30°
-40dB
SIDE LOBES
RATIO
300°
60°
270°
90°
-40 -30 -20 -10 0dB
240°
120°
-44dB
FRONT TO BACK RATIO
210°
150°
180°

FIG. 1