US 20170033611A1

(19) United States

(12) Patent Application Publication

SHIN et al.

(10) Pub. No.: US 2017/0033611 A1

(43) Pub. Date: Feb. 2, 2017

(54) **WIRELESS POWER TRANSMITTER AND WIRELESS POWER TRANSMISSION METHOD**

(71) Applicant: **SAMSUNG ELECTRO-MECHANICS CO., LTD.**, Suwon-si (KR)

(72) Inventors: **Eun Young SHIN**, Suwon-si (KR); **Chang Soo KANG**, Suwon-si (KR); **Chul Gyun PARK**, Suwon-si (KR); **Jae Suk SUNG**, Suwon-si (KR); **Jae Hyoung CHO**, Suwon-si (KR); **Sang Ho CHO**, Suwon-si (KR)

(73) Assignee: **SAMSUNG ELECTRO-MECHANICS CO., LTD.**, Suwon-si (KR)

(21) Appl. No.: **15/188,078**

(22) Filed: **Jun. 21, 2016**

(30) **Foreign Application Priority Data**

Jul. 31, 2015 (KR) 10-2015-0108876

Publication Classification

(51) **Int. Cl.**

H02J 50/12	(2006.01)
H02J 50/80	(2006.01)
H02J 7/02	(2006.01)
H02J 50/60	(2006.01)

(52) **U.S. Cl.**

CPC ***H02J 50/12*** (2016.02); ***H02J 50/60*** (2016.02); ***H02J 50/80*** (2016.02); ***H02J 7/025*** (2013.01)

(57) **ABSTRACT**
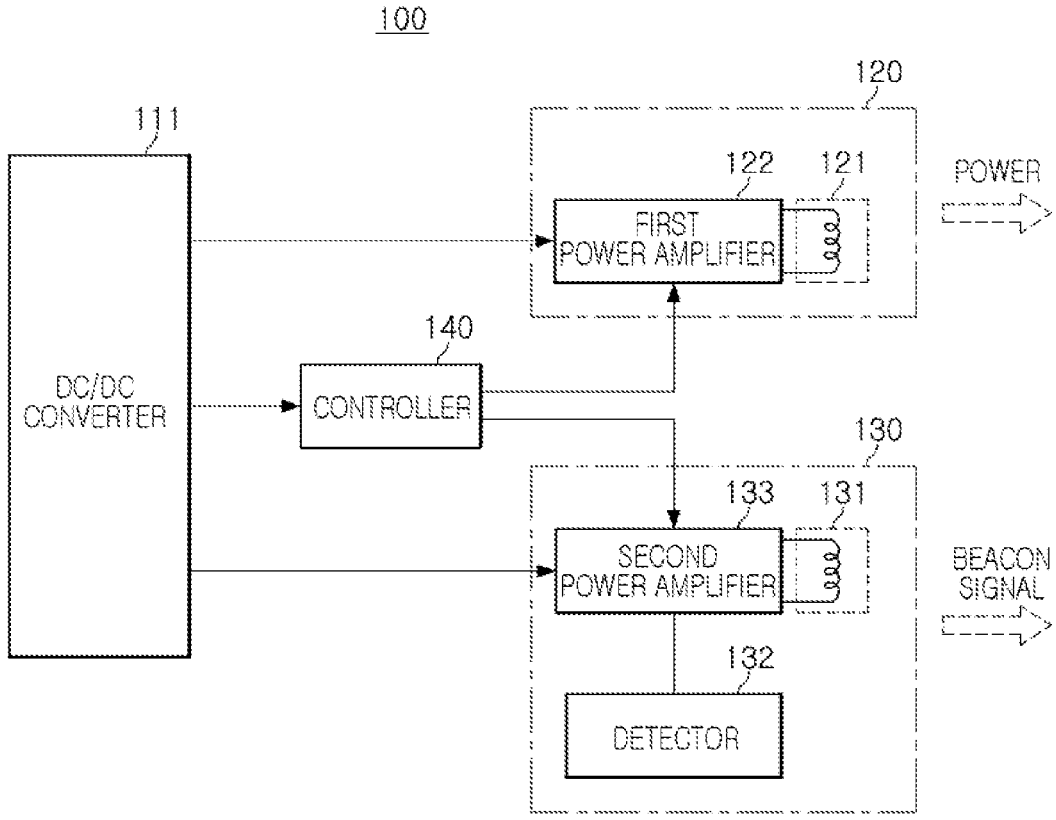
A wireless power transmitter includes a sensor configured to sense an object, a power transmitter configured to wirelessly transmit power to a wireless power receiver, and a controller configured to determine whether the object is the wireless power receiver, and control the power transmitter to wirelessly transmit power to the wireless power receiver upon the object being determined to be the wireless power receiver, wherein the sensor and the power transmitter comprise separate coils.