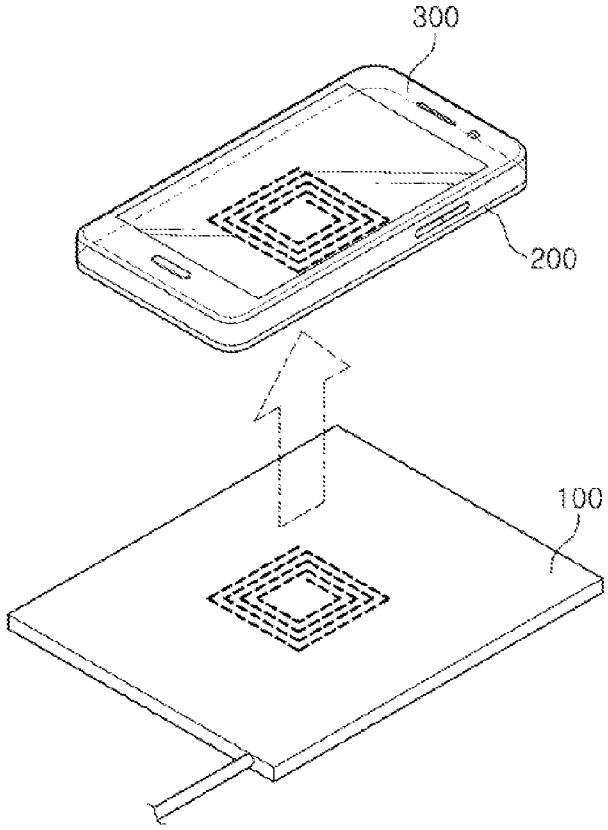
300
200
100

FIG. 1

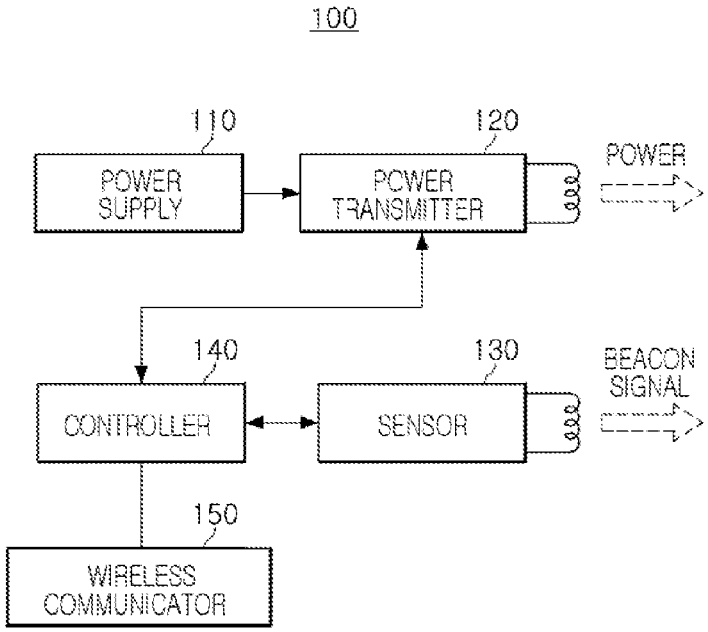
100
110
POWER SUPPLY
120
POWER TRANSMITTER
POWER
140
CONTROLLER
130
SENSOR
BEACON SIGNAL
150
WIRELESS COMMUNICATOR

FIG. 2