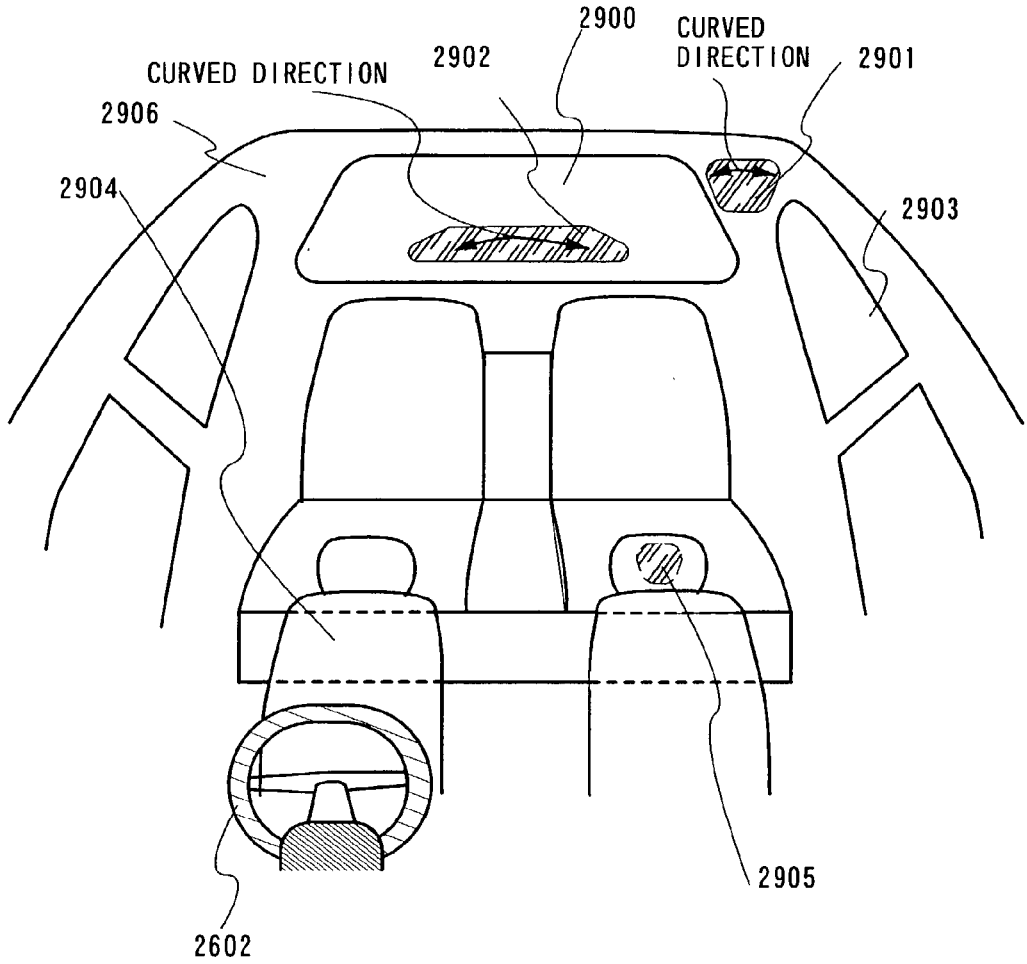
2900
CURVED DIRECTION
2902
CURVED DIRECTION
2901
2906
2904
2903
2905
2602

FIG. 14