US 20040179312A1

(19) United States

(12) Patent Application Publication

(10) Pub. No.: US 2004/0179312 A1

(43) Pub. Date: Sep. 16, 2004

Freitag et al.

(54) LOW RESISTANCE ANTIPARALLEL TAB MAGNETORESISTIVE SENSOR

(76) Inventors: **James Mac Freitag**, San Jose, CA (US); **Mustafa Michael Pinarbasi**, Morgan Hill, CA (US); **Patrick Rush Webb**, Los Gatos, CA (US)

Correspondence Address:
Hitachi Global Storage Technologies
Intellectual Property Law
5600 Cottle Road (NHGB/014-2)
San Jose, CA 95193 (US)

(21) Appl. No.: **10/389,727**

(22) Filed: **Mar. 13, 2003**

Publication Classification

(51) **Int. Cl.**[7] **G11B 5/39**

(52) **U.S. Cl.** **360/324.12**

(57) **ABSTRACT**
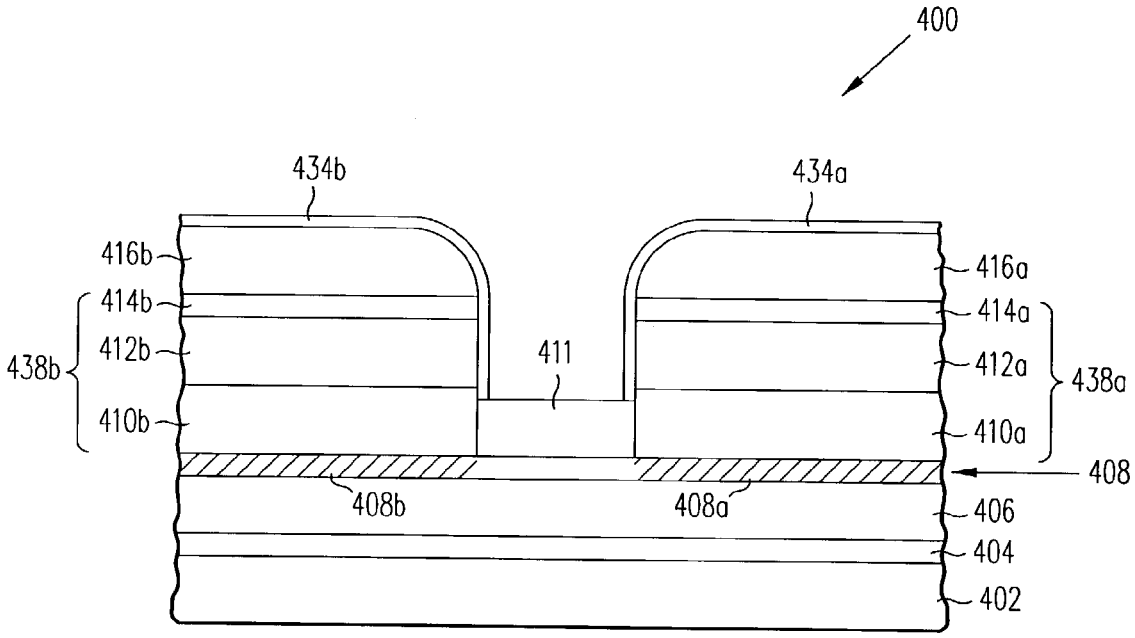
A magnetoresistive sensor having bias stabilization tabs includes a protective cap layer. The protective cap layer prevents oxidation, avoids potential damage from using ion milling for oxidation removal, and lowers parasitic resistance. A disk drive is provided with the magnetoresistive sensor including a protective cap layer.