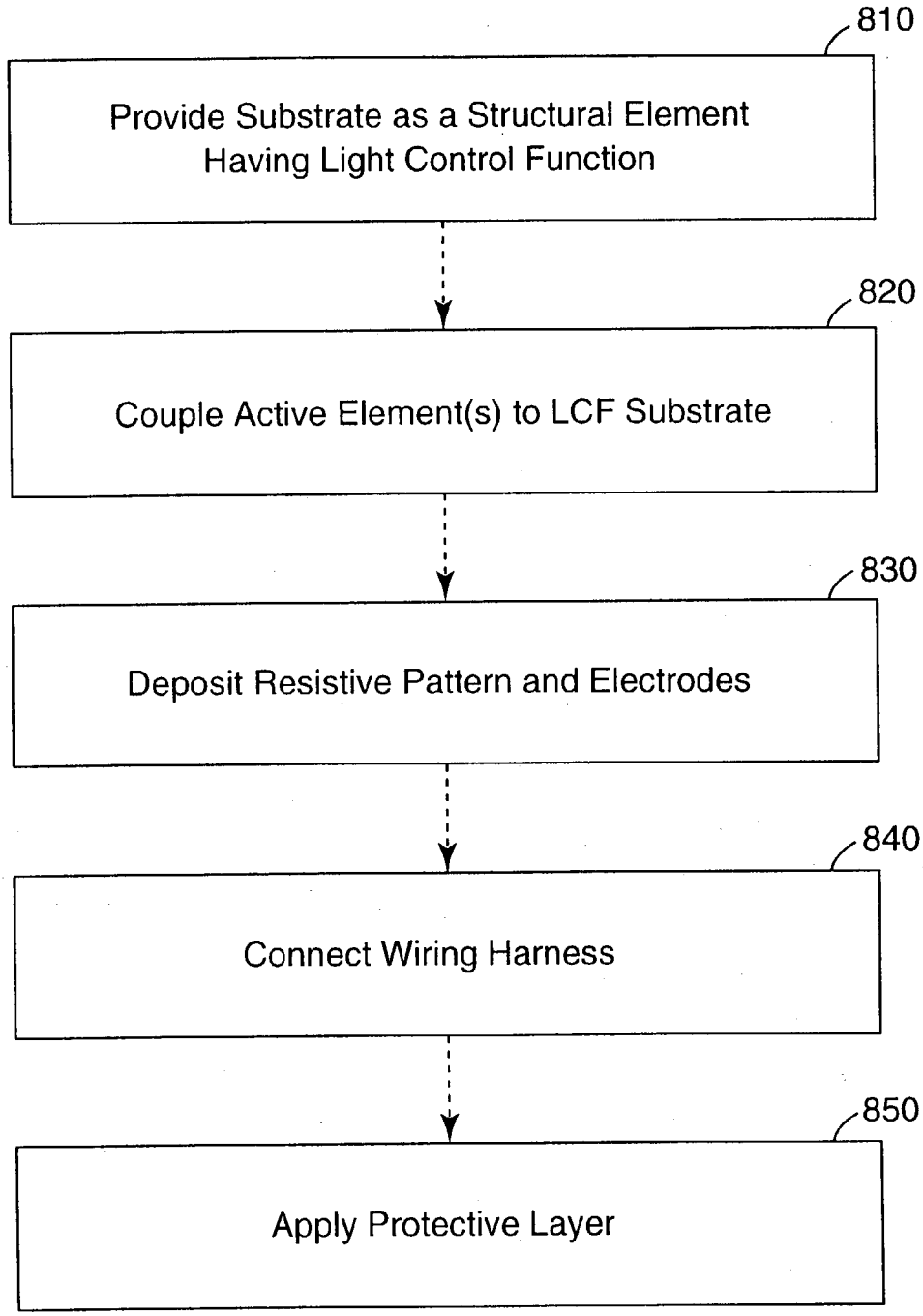
810
Provide Substrate as a Structural Element Having Light Control Function
820
Couple Active Element(s) to LCF Substrate
830
Deposit Resistive Pattern and Electrodes
840
Connect Wiring Harness
850
Apply Protective Layer

Fig. 8