FIG.4

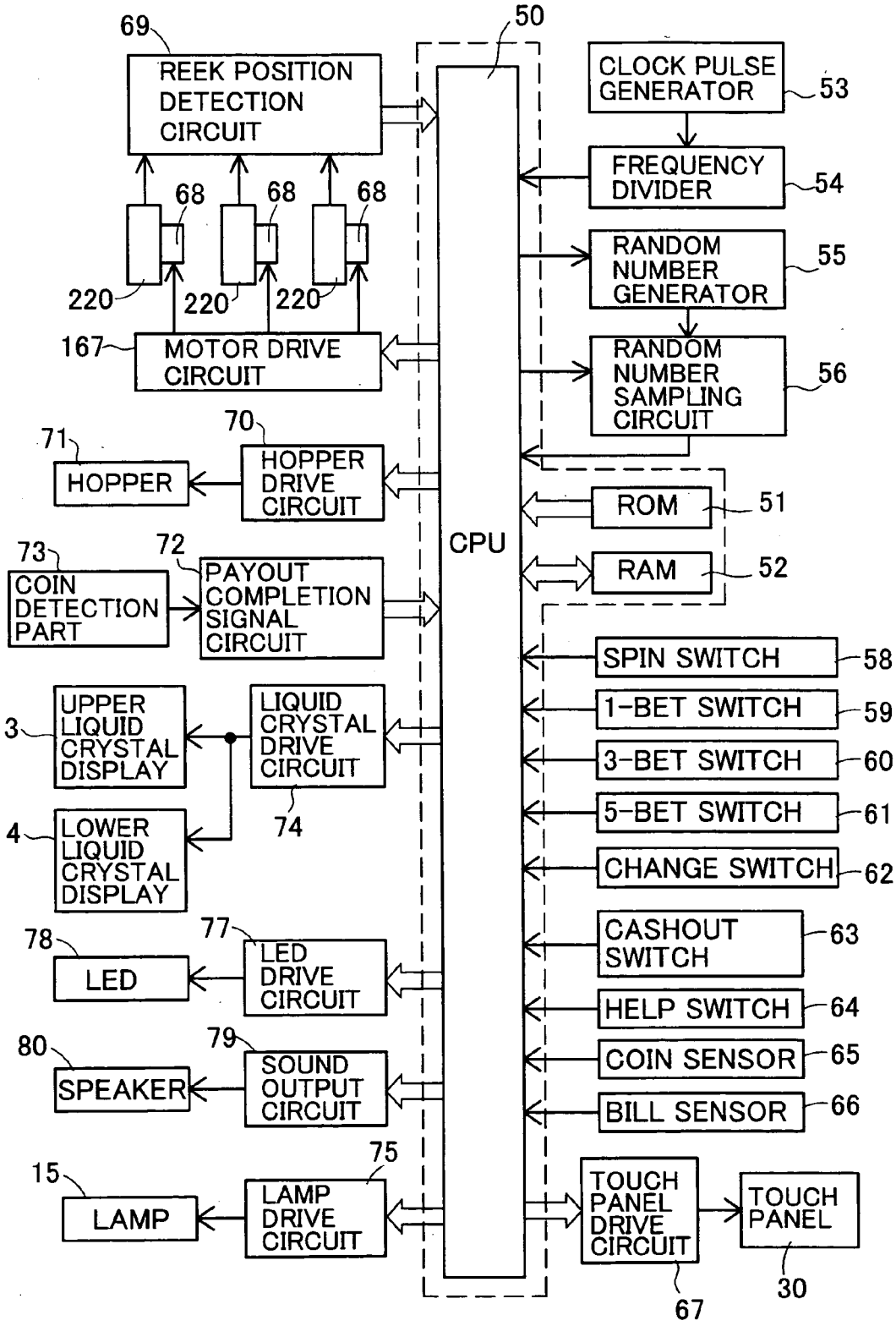
69
REEK POSITION DETECTION CIRCUIT
50
CLOCK PULSE GENERATOR
53
FREQUENCY DIVIDER
54
RANDOM NUMBER GENERATOR
55
RANDOM NUMBER SAMPLING CIRCUIT
56
68
68
68
220
220
220
167
MOTOR DRIVE CIRCUIT
71
HOPPER
70
HOPPER DRIVE CIRCUIT
ROM
51
CPU
RAM
52
73
COIN DETECTION PART
72
PAYOUT COMPLETION SIGNAL CIRCUIT
SPIN SWITCH
58
1-BET SWITCH
59
3-BET SWITCH
60
5-BET SWITCH
61
CHANGE SWITCH
62
3
UPPER LIQUID CRYSTAL DISPLAY
LIQUID CRYSTAL DRIVE CIRCUIT
74
4
LOWER LIQUID CRYSTAL DISPLAY
78
LED
77
LED DRIVE CIRCUIT
CASHOUT SWITCH
63
HELP SWITCH
64
80
SPEAKER
79
SOUND OUTPUT CIRCUIT
COIN SENSOR
65
BILL SENSOR
66
15
LAMP
75
LAMP DRIVE CIRCUIT
TOUCH PANEL DRIVE CIRCUIT
TOUCH PANEL
67
30