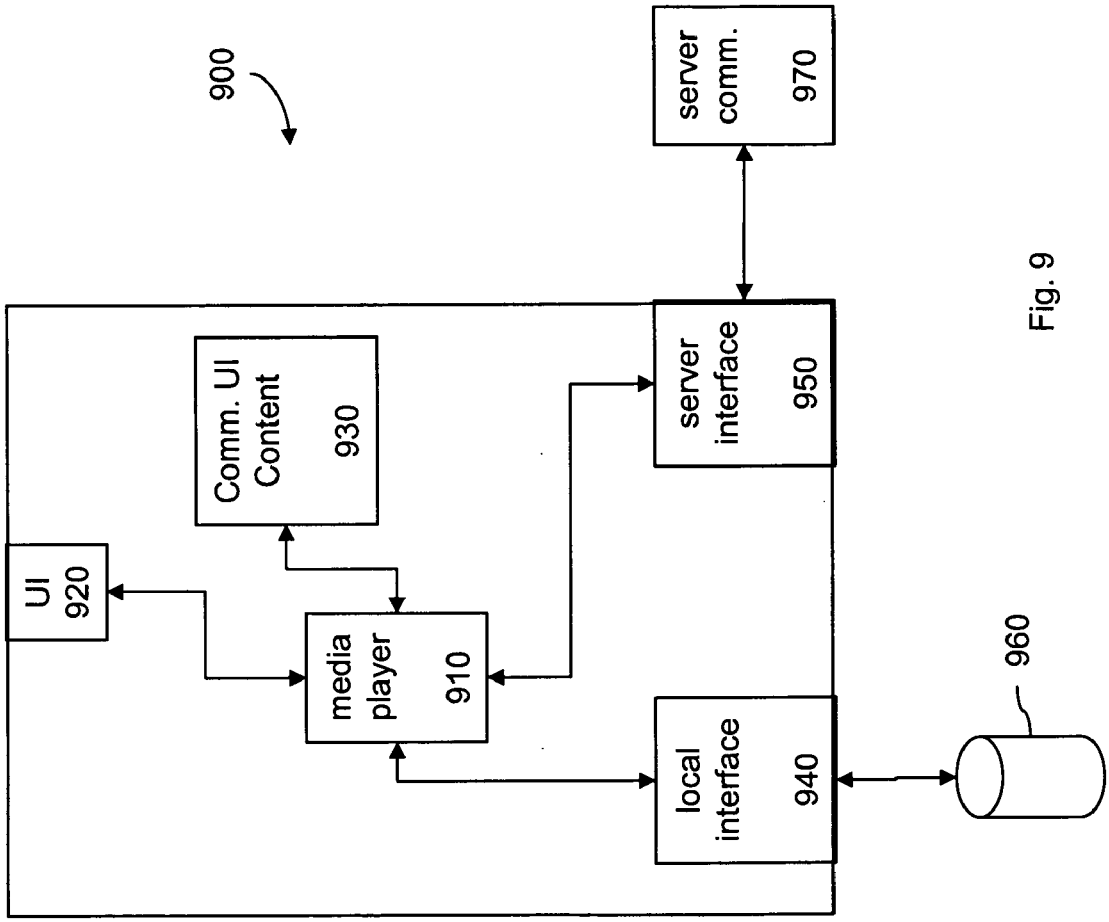
900
UI
920
Comm. UI
Content
930
media
player
910
server
interface
950
local
interface
940
server
comm.
970
960

Fig. 9