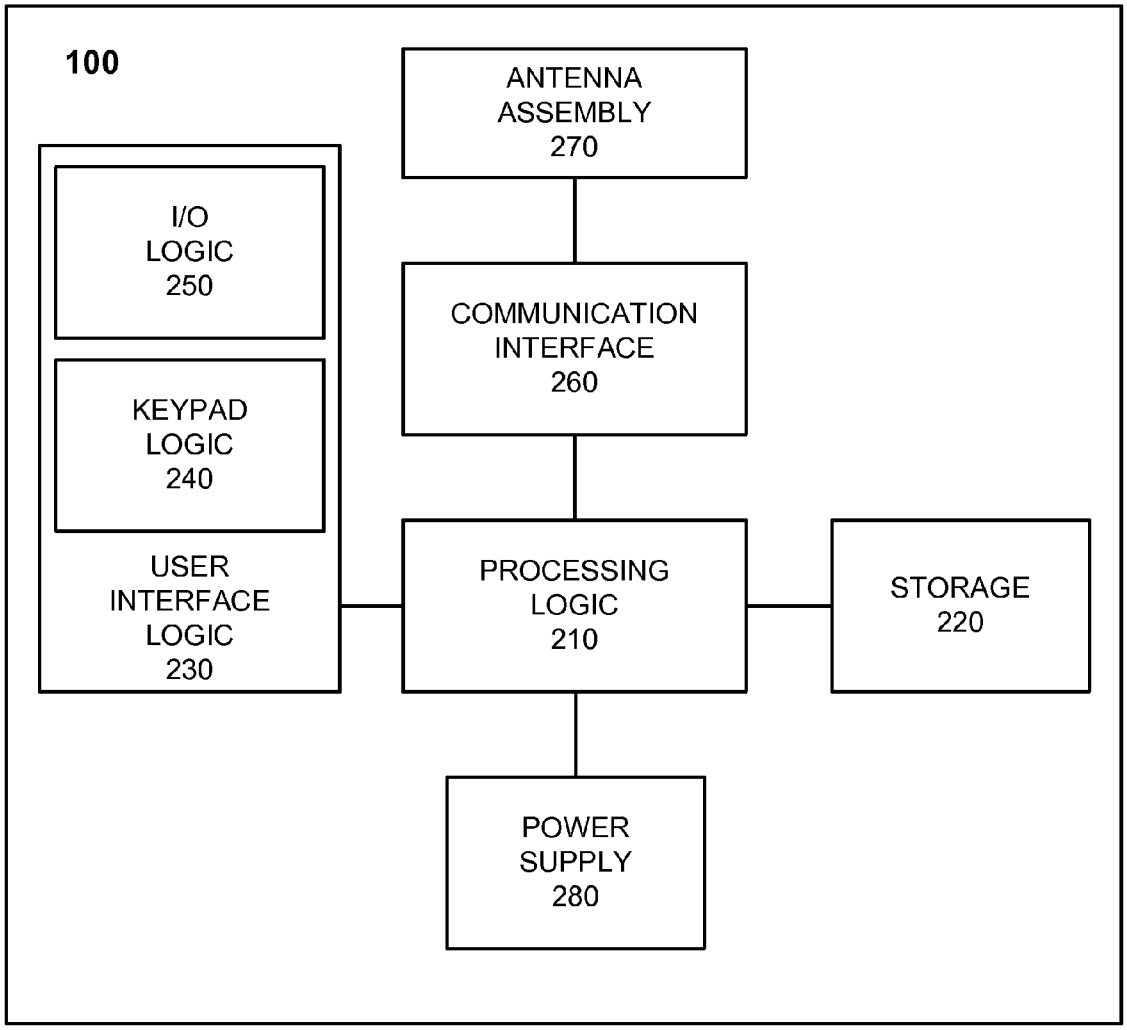
100
ANTENNA ASSEMBLY 270
I/O LOGIC 250
COMMUNICATION INTERFACE 260
KEYPAD LOGIC 240
USER INTERFACE LOGIC 230
PROCESSING LOGIC 210
STORAGE 220
POWER SUPPLY 280

FIG. 2