FIG. 4

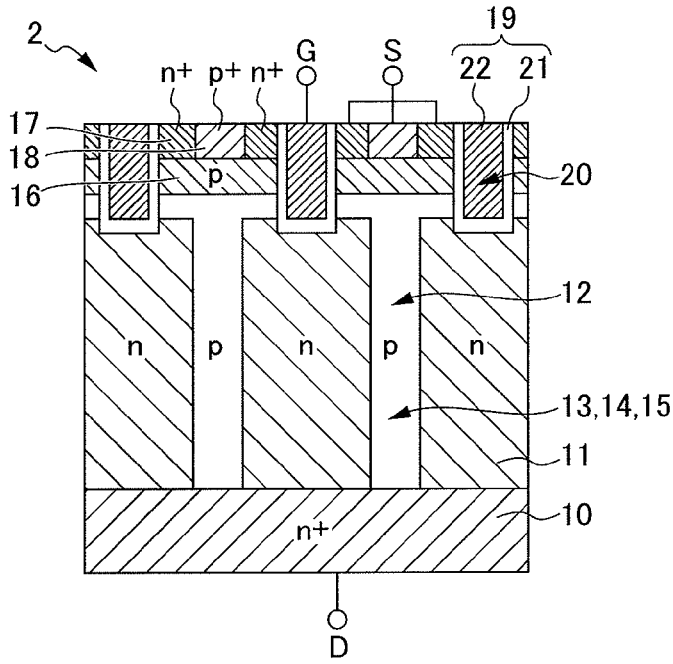
2
n+
p+
n+
G
S
19
22
21
17
18
16
p
20
12
n
p
n
p
n
13,14,15
11
10
n+
D

FIG. 5

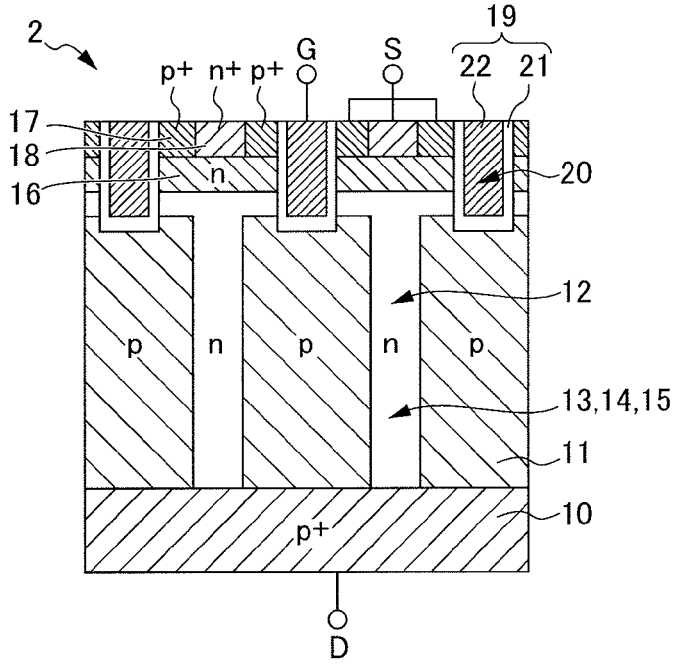
2
p+
n+
p+
G
S
19
22
21
17
18
16
n
20
12
p
n
p
n
p
13,14,15
11
10
p+
D