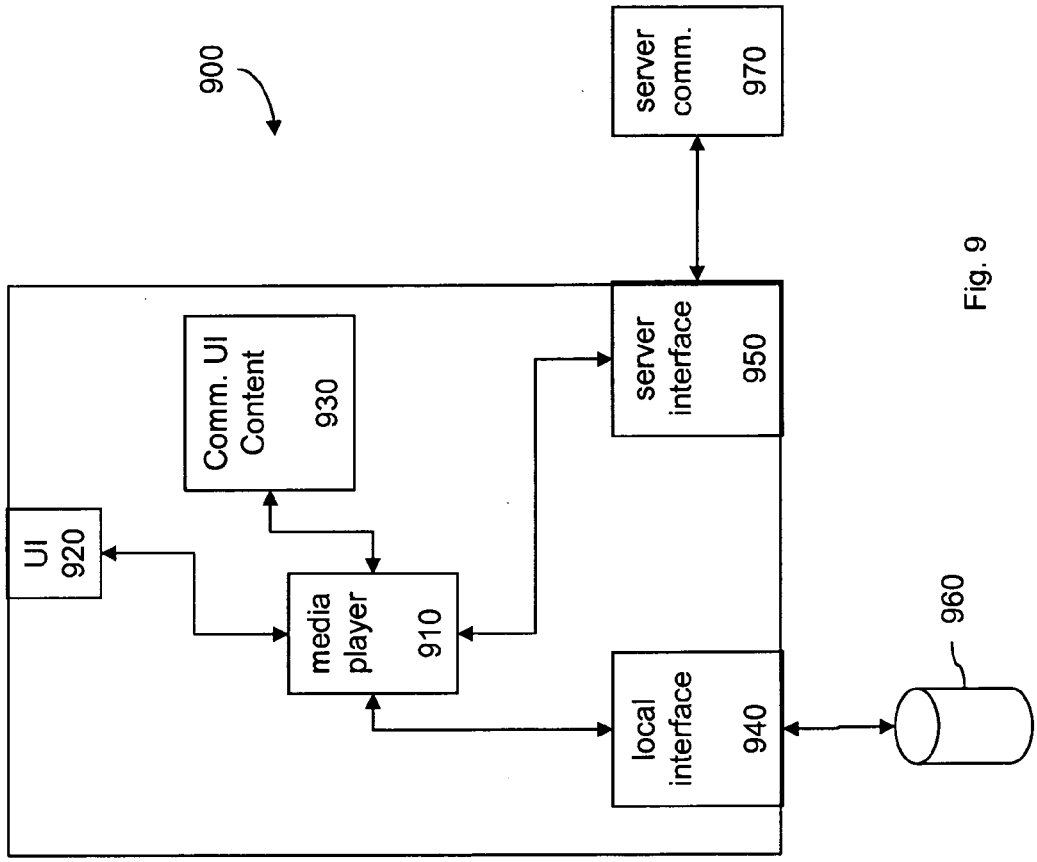
900
UI
920
Comm. UI
Content
930
media
player
910
server
interface
950
local
interface
940
960
server
comm.
970

Fig. 9