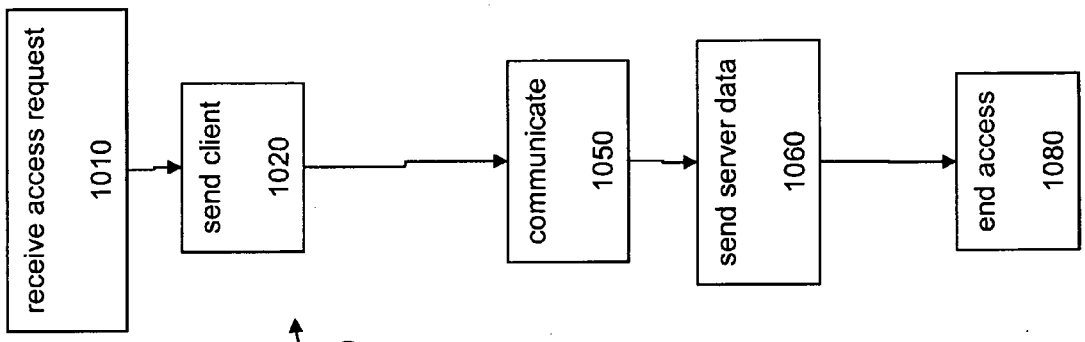
receive access request
1010
send client
1020
communicate
1050
send server data
1060
end access
1080
1000

Fig. 10

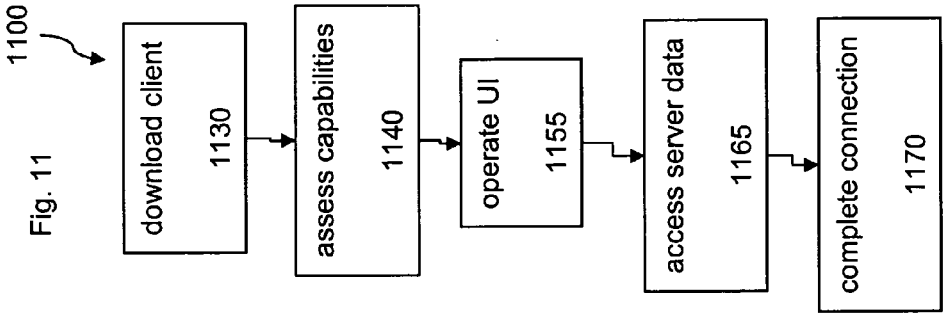
1100
download client
1130
assess capabilities
1140
operate UI
1155
access server data
1165
complete connection
1170

Fig. 11