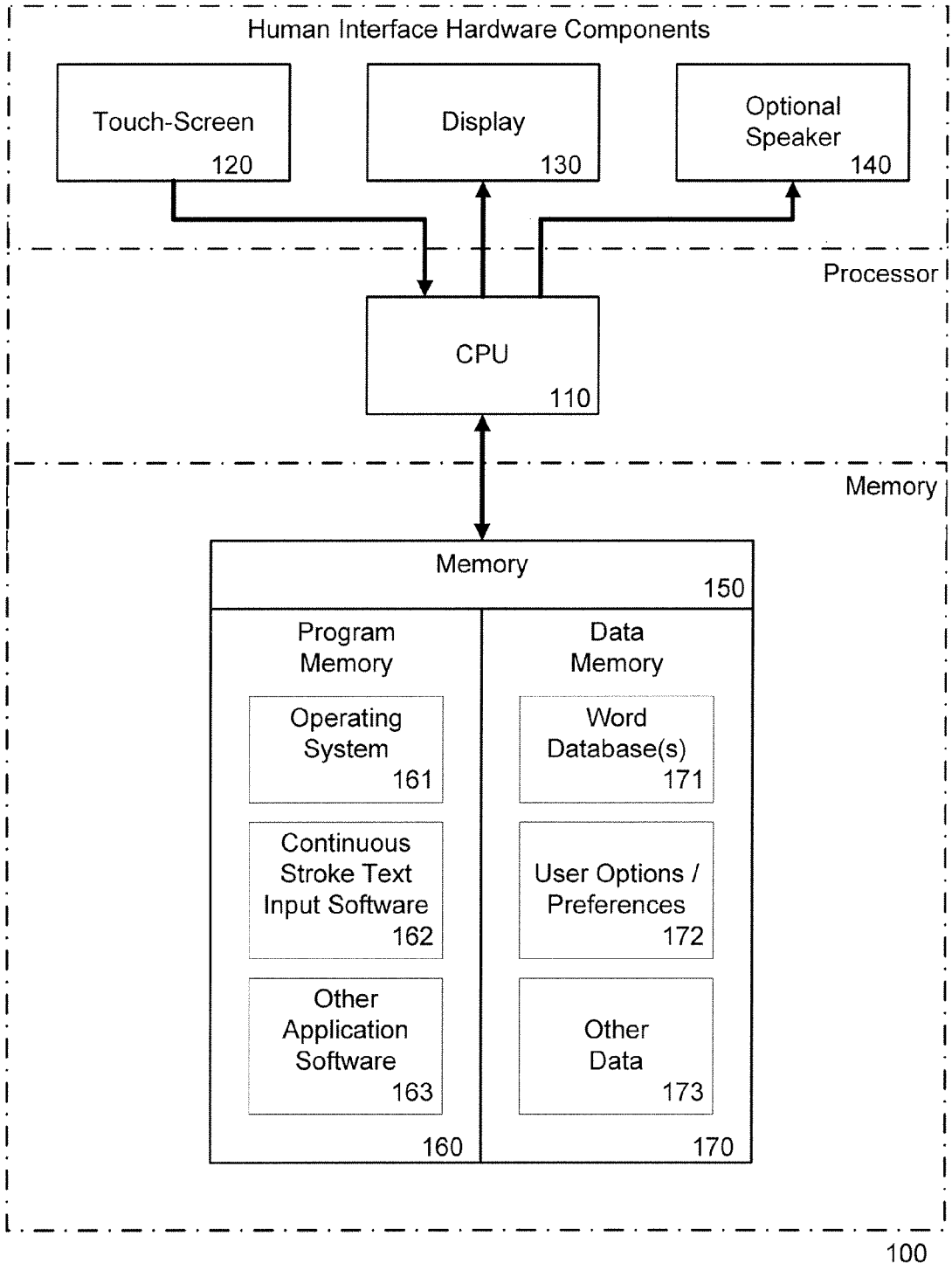
Human Interface Hardware Components
Touch-Screen
120
Display
130
Optional
Speaker
140
Processor
CPU
110
Memory
Memory
150
Program
Memory
Data
Memory
Operating
System
161
Word
Database(s)
171
Continuous
Stroke Text
Input Software
162
User Options /
Preferences
172
Other
Application
Software
163
Other
Data
173
160
170
100

Figure 1