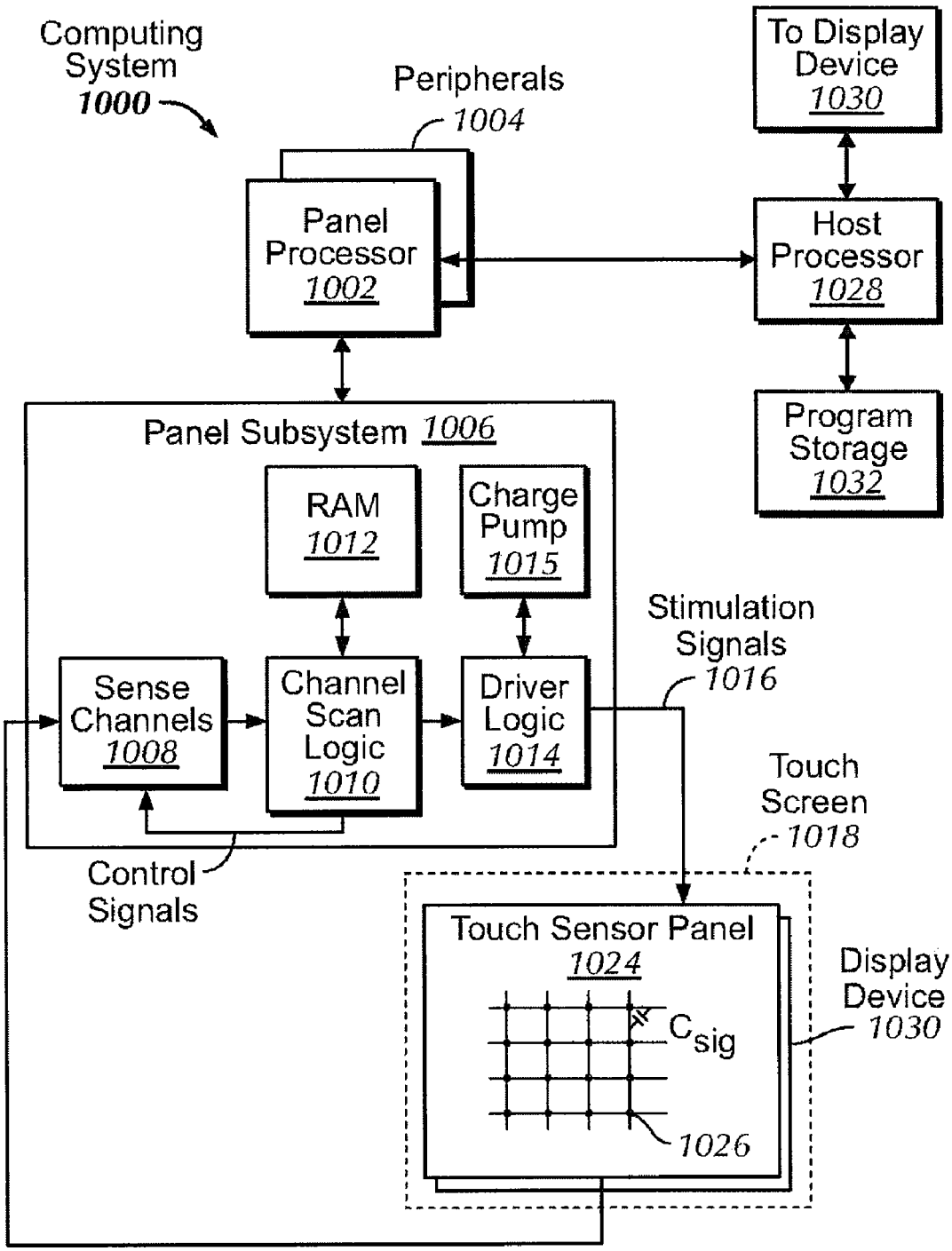
Computing System 1000
Peripherals 1004
Panel Processor 1002
To Display Device 1030
Host Processor 1028
Program Storage 1032
Panel Subsystem 1006
RAM 1012
Charge Pump 1015
Sense Channels 1008
Channel Scan Logic 1010
Driver Logic 1014
Stimulation Signals 1016
Touch Screen 1018
Control Signals
Touch Sensor Panel 1024
Csig
1026
Display Device 1030

FIG. 10