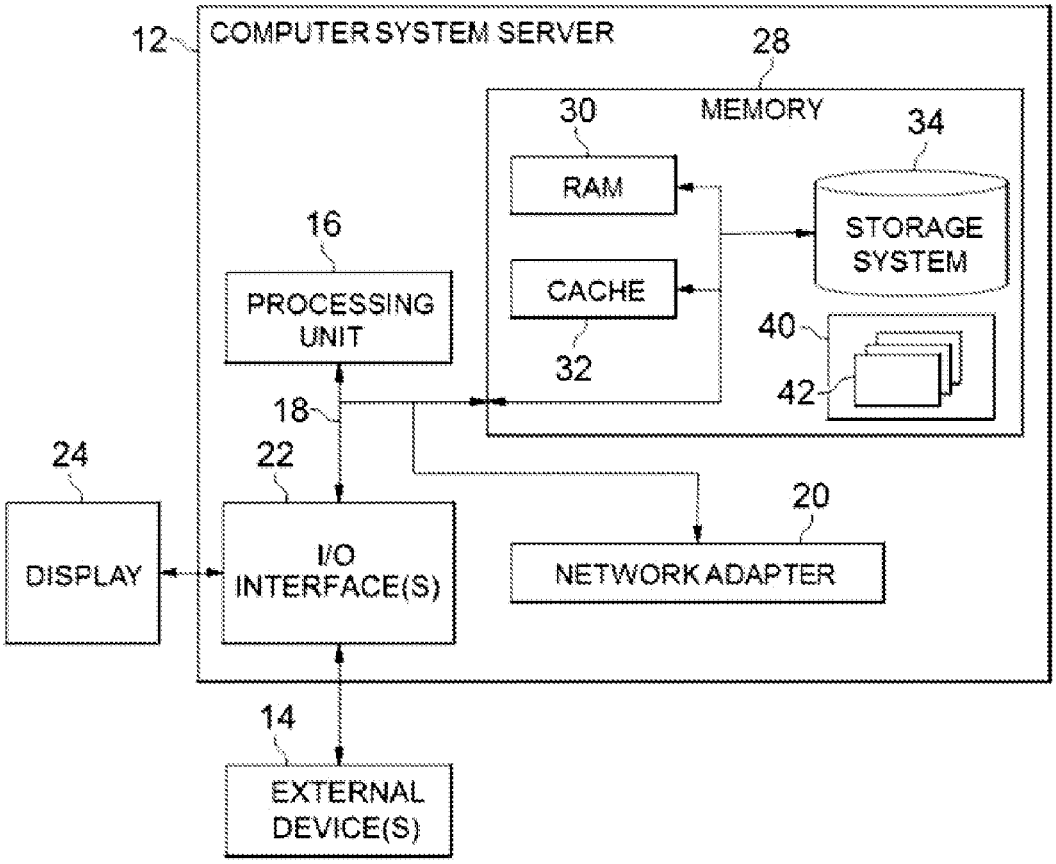
12
COMPUTER SYSTEM SERVER
28
MEMORY
30
RAM
34
STORAGE SYSTEM
16
PROCESSING UNIT
CACHE
32
40
42
18
24
22
20
DISPLAY
I/O INTERFACE(S)
NETWORK ADAPTER
14
EXTERNAL DEVICE(S)

FIG. 1