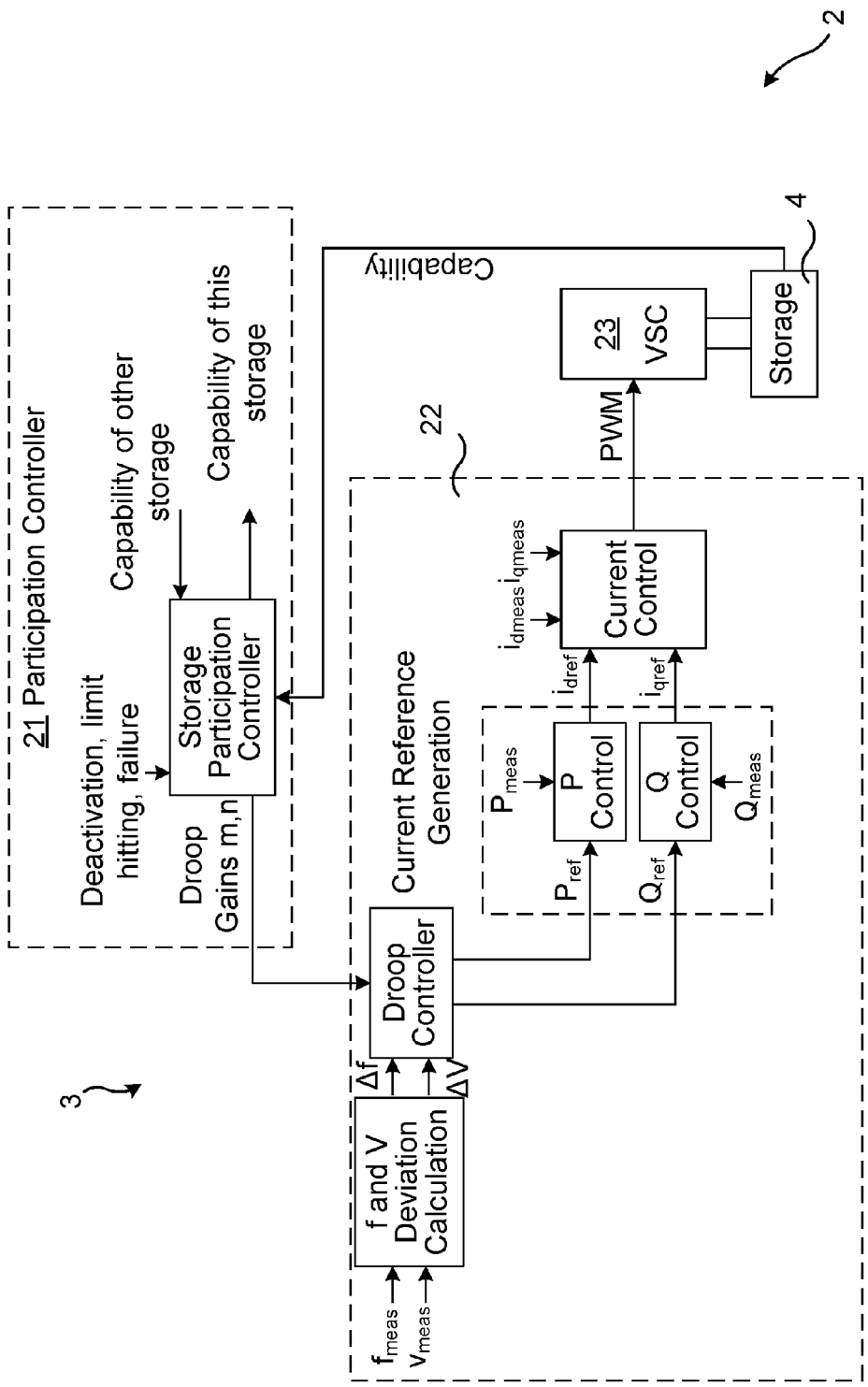
2
21 Participation Controller
Deactivation, limit hitting, failure
Capability of other storage
Capability of this storage
Storage Participation Controller
Droop Gains m,n
Capability
4
Storage
23 VSC
PWM
22
Current Reference Generation
Current Control
i_{dmeas} i_{qmeas}
i_{dref}
i_{qref}
P_{meas}
P Control
Q Control
Q_{meas}
P_{ref}
Q_{ref}
Droop Controller
3
Δf
ΔV
f and V Deviation Calculation
f_{meas}
v_{meas}

Fig. 3