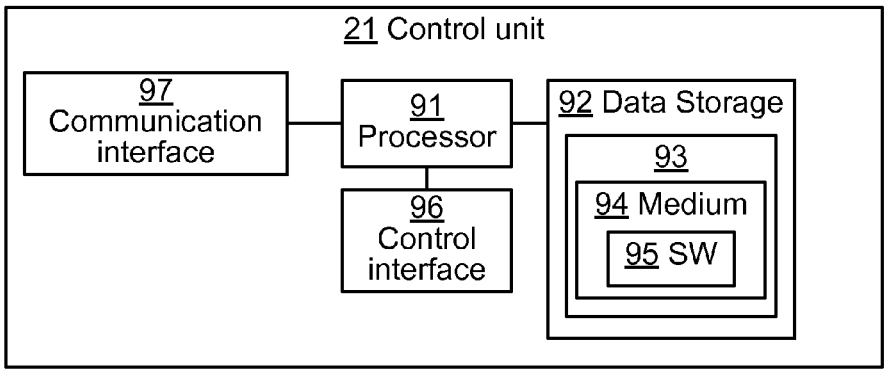
21 Control unit
97 Communication interface
91 Processor
96 Control interface
92 Data Storage
93
94 Medium
95 SW

Fig. 9

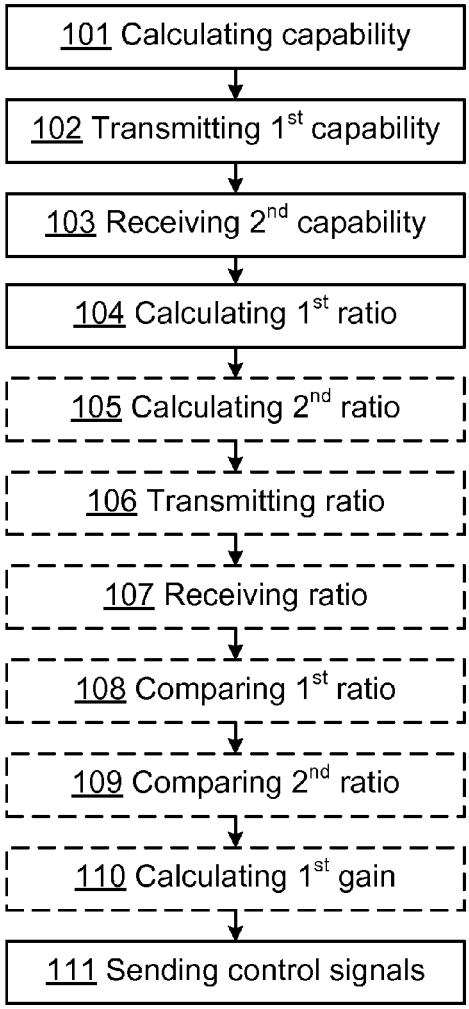
101 Calculating capability
102 Transmitting 1st capability
103 Receiving 2nd capability
104 Calculating 1st ratio
105 Calculating 2nd ratio
106 Transmitting ratio
107 Receiving ratio
108 Comparing 1st ratio
109 Comparing 2nd ratio
110 Calculating 1st gain
111 Sending control signals

Fig. 10