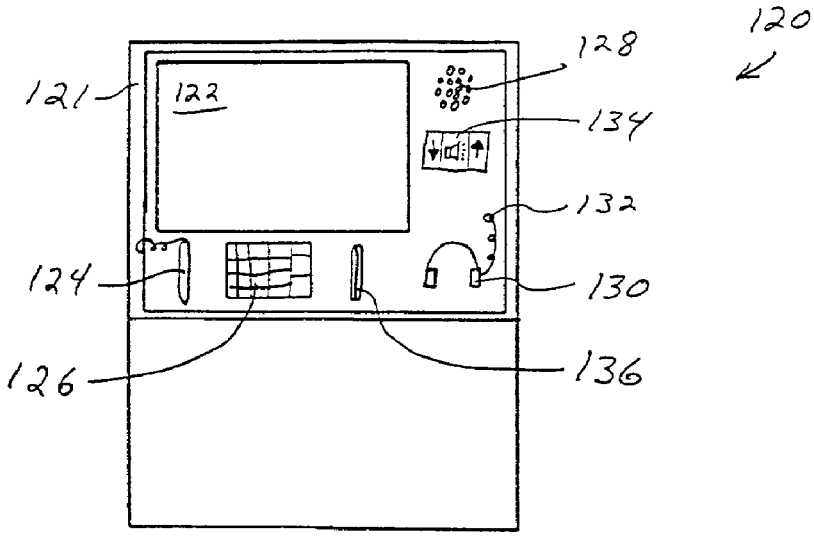
120
121
122
128
134
132
124
130
126
136

Fig. 5

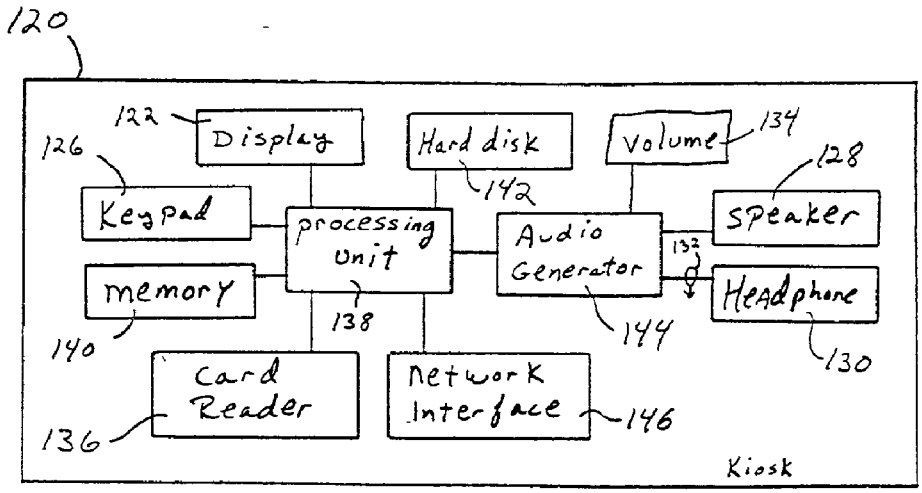
120
122
Display
Hard disk
Volume
134
126
128
Keypad
142
processing Unit
Audio Generator
Speaker
132
memory
Headphone
138
144
140
130
Card Reader
Network Interface
146
136
Kiosk

Fig. 6