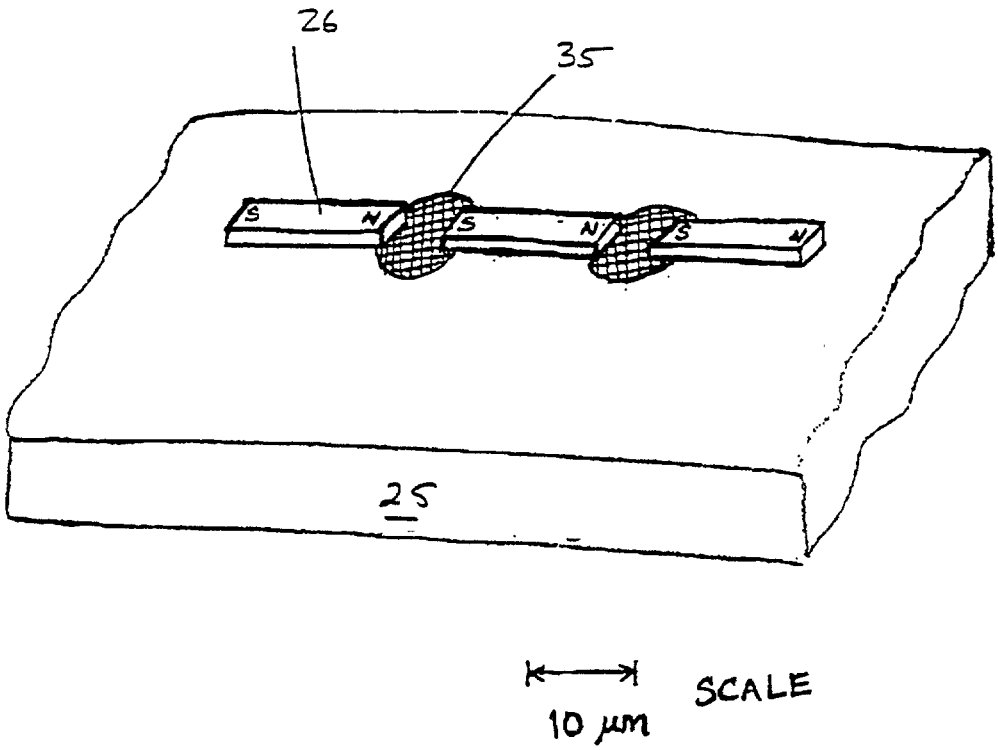

FIGURE 12