FIG. 15

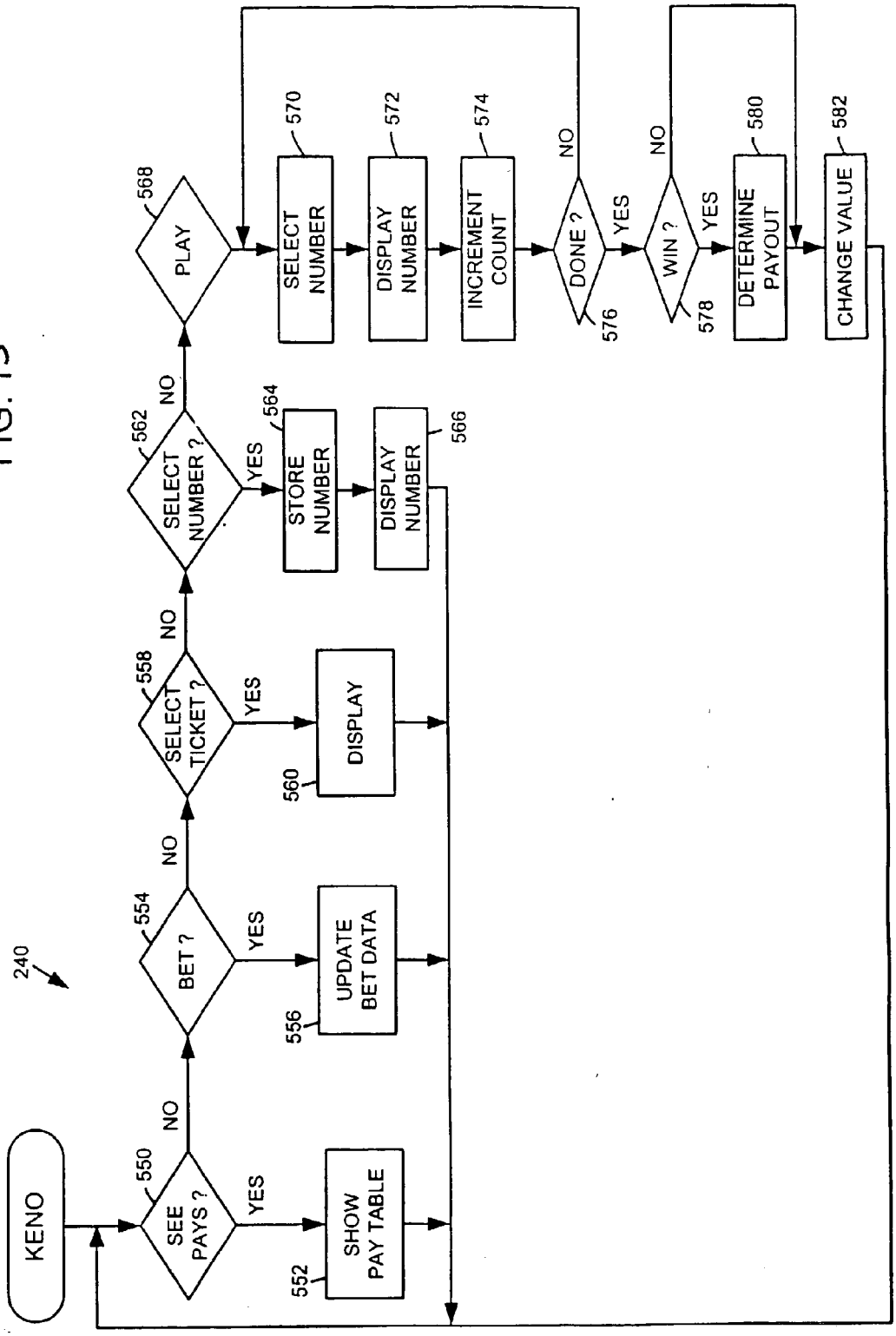
240
KENO
SEE PAYS ?
550
YES
NO
SHOW PAY TABLE
552
BET ?
554
YES
NO
UPDATE BET DATA
556
SELECT TICKET ?
558
YES
NO
DISPLAY
560
SELECT NUMBER ?
562
YES
NO
STORE NUMBER
564
DISPLAY NUMBER
566
PLAY
568
SELECT NUMBER
570
DISPLAY NUMBER
572
INCREMENT COUNT
574
DONE ?
576
YES
NO
WIN ?
578
YES
NO
DETERMINE PAYOUT
580
CHANGE VALUE
582