FIG. 17

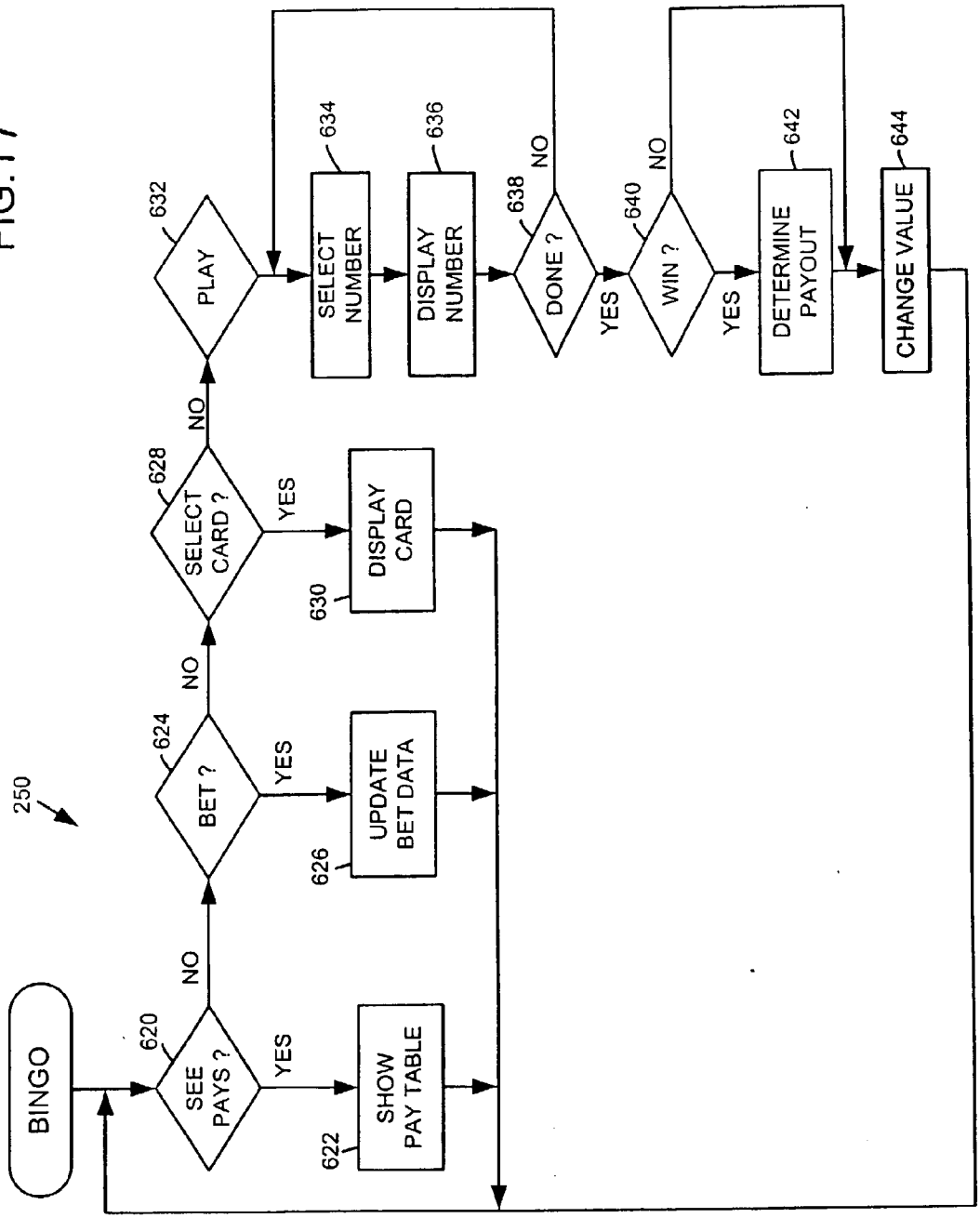
250
BINGO
620
SEE PAYS ?
YES
NO
622
SHOW PAY TABLE
624
BET ?
YES
NO
626
UPDATE BET DATA
628
SELECT CARD ?
YES
NO
630
DISPLAY CARD
632
PLAY
634
SELECT NUMBER
636
DISPLAY NUMBER
638
DONE ?
YES
NO
640
WIN ?
YES
NO
642
DETERMINE PAYOUT
644
CHANGE VALUE