Fig. 15

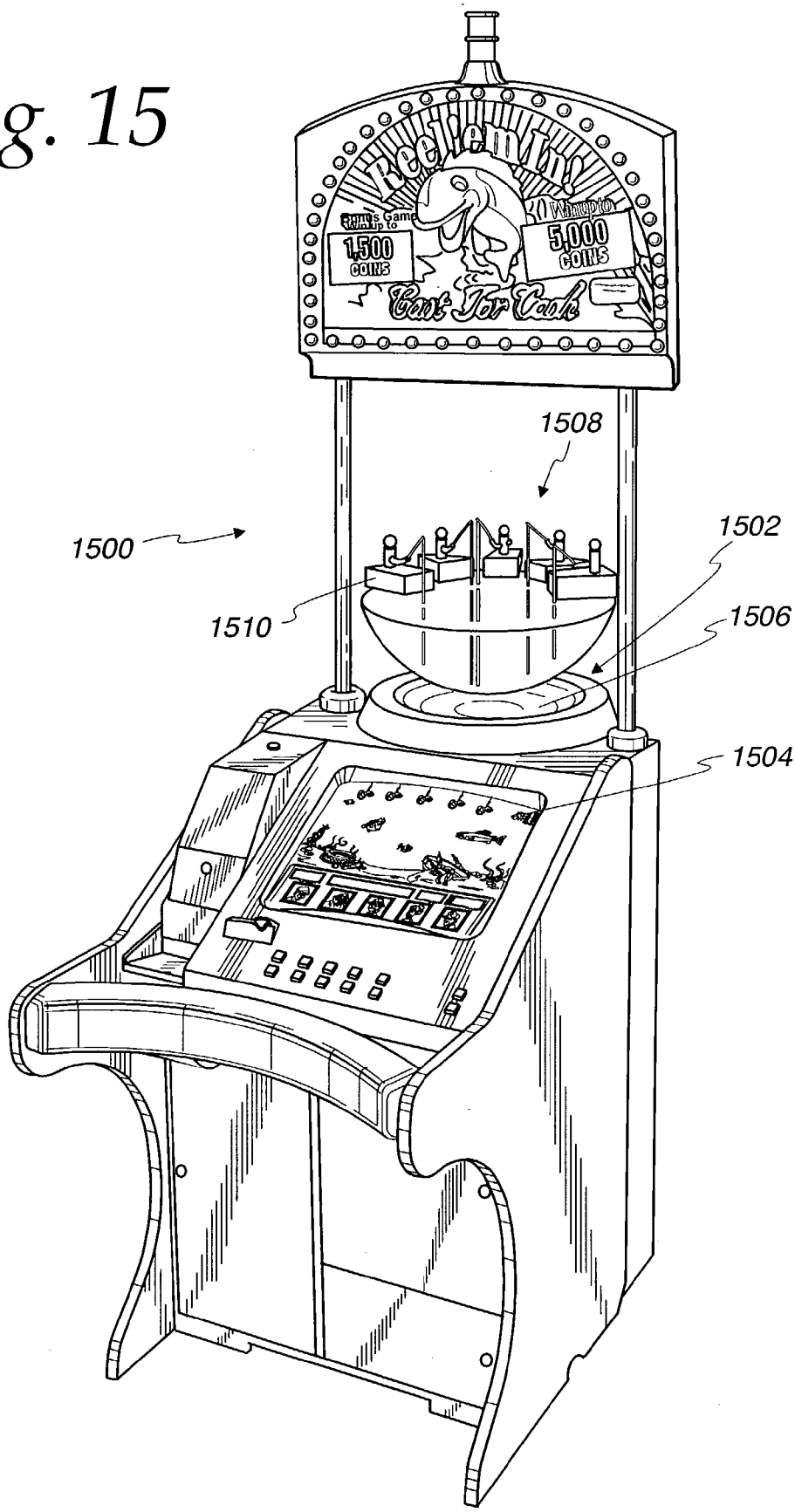
Reelemtns
Bonus Game
Win up to
1,500
COINS
Win up to
5,000
COINS
Cast For Cash
1508
1500
1502
1510
1506
1504