Fig. 2a

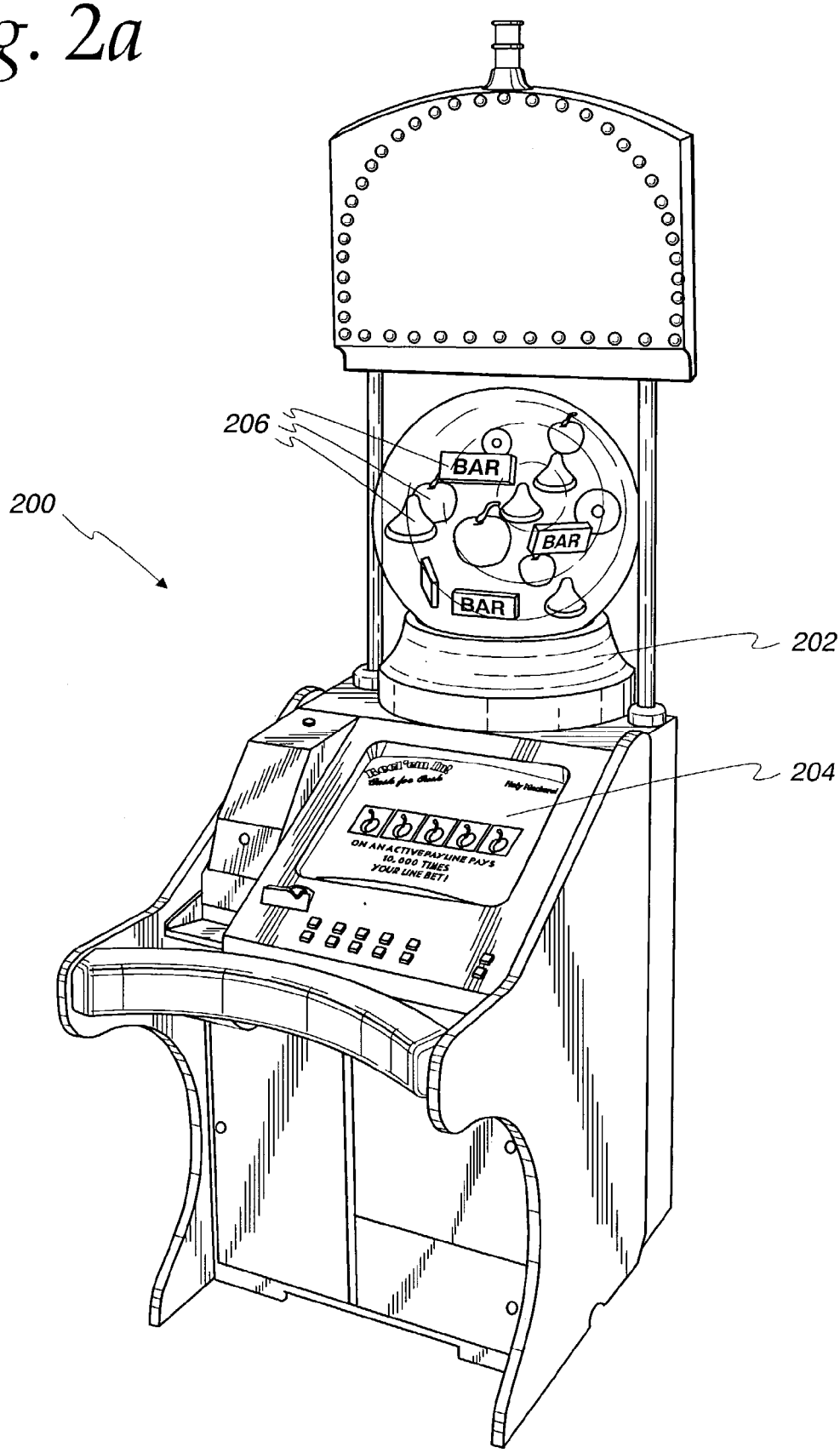
206
200
BAR
BAR
BAR
202
204
ON AN ACTIVE PAY-LINE PAYS
10,000 TIMES
YOUR LINE BET!