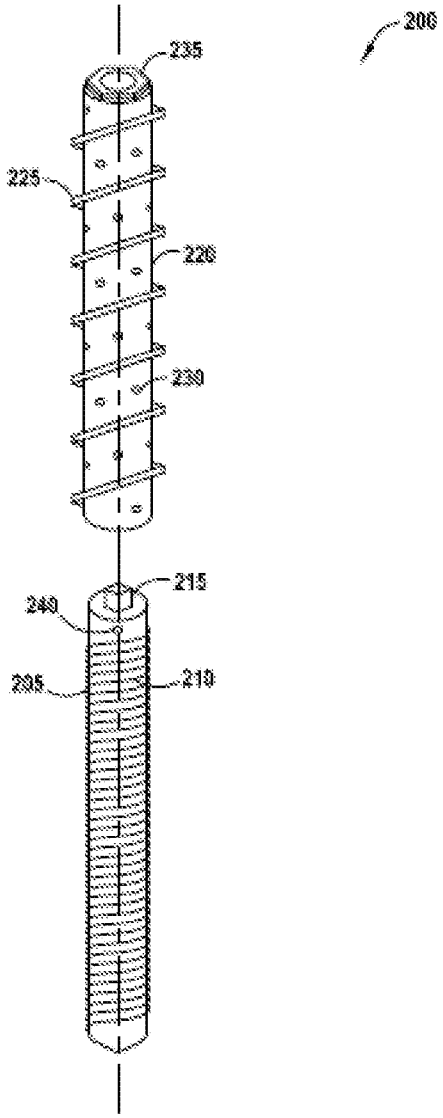

FIG 6A