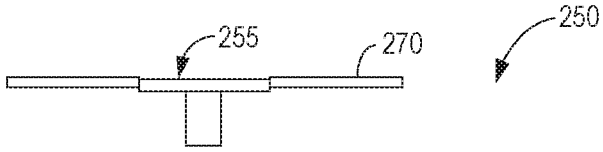

FIG 7A

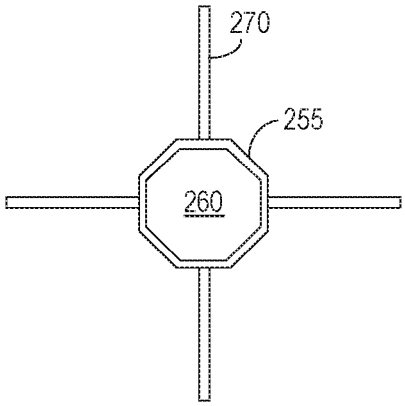

FIG 7B

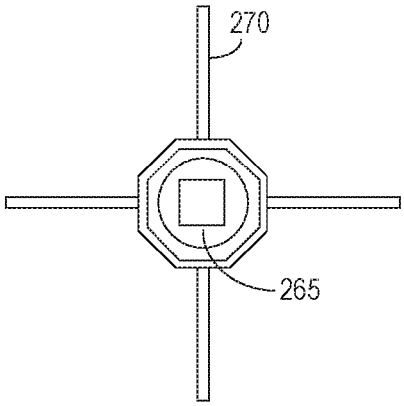

FIG 7C