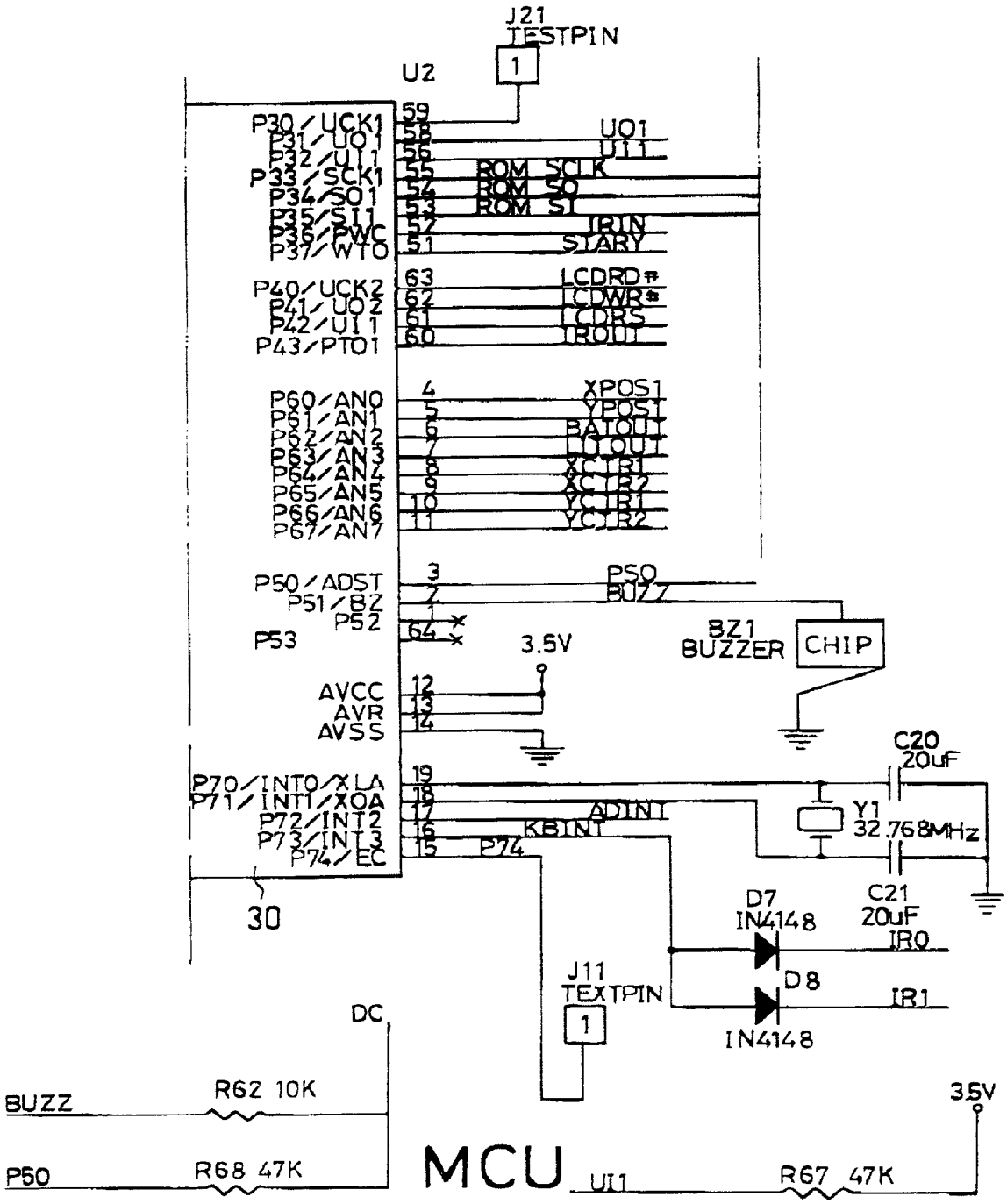
J21
TESTPIN
U2
P30/UCK1
P31/UO1
P32/UI1
P33/SCK1
P34/SO1
P35/SI1
P36/PWC
P37/WTO
P40/UCK2
P41/UO2
P42/UI1
P43/PTO1
P60/AN0
P61/AN1
P62/AN2
P63/AN3
P64/AN4
P65/AN5
P66/AN6
P67/AN7
P50/ADST
P51/BZ
P52
P53
AVCC
AVR
AVSS
P70/INT0/XLA
P71/INT1/XOA
P72/INT2
P73/INT3
P74/EC
30
UO1
UI1
ROM SCLK
ROM SO
ROM SI
IRIN
STARY
LCDRD#
LCDWR#
LCDRS
IROUT
XPOS1
YPOS1
BATOUT
LUOUT
XCIR1
XCIR2
YCIR1
YCIR2
PS0
BUZZ
BZ1
BUZZER
CHIP
3.5V
C20
20uF
Y1
32.768MHz
C21
20uF
ADINT
KBINT
P74
D7
IN4148
D8
IN4148
IR0
IR1
J11
TEXTPIN
DC
BUZZ
R62 10K
P50
R68 47K
MCU
UI1
R67 47K
3.5V

FIG.7C