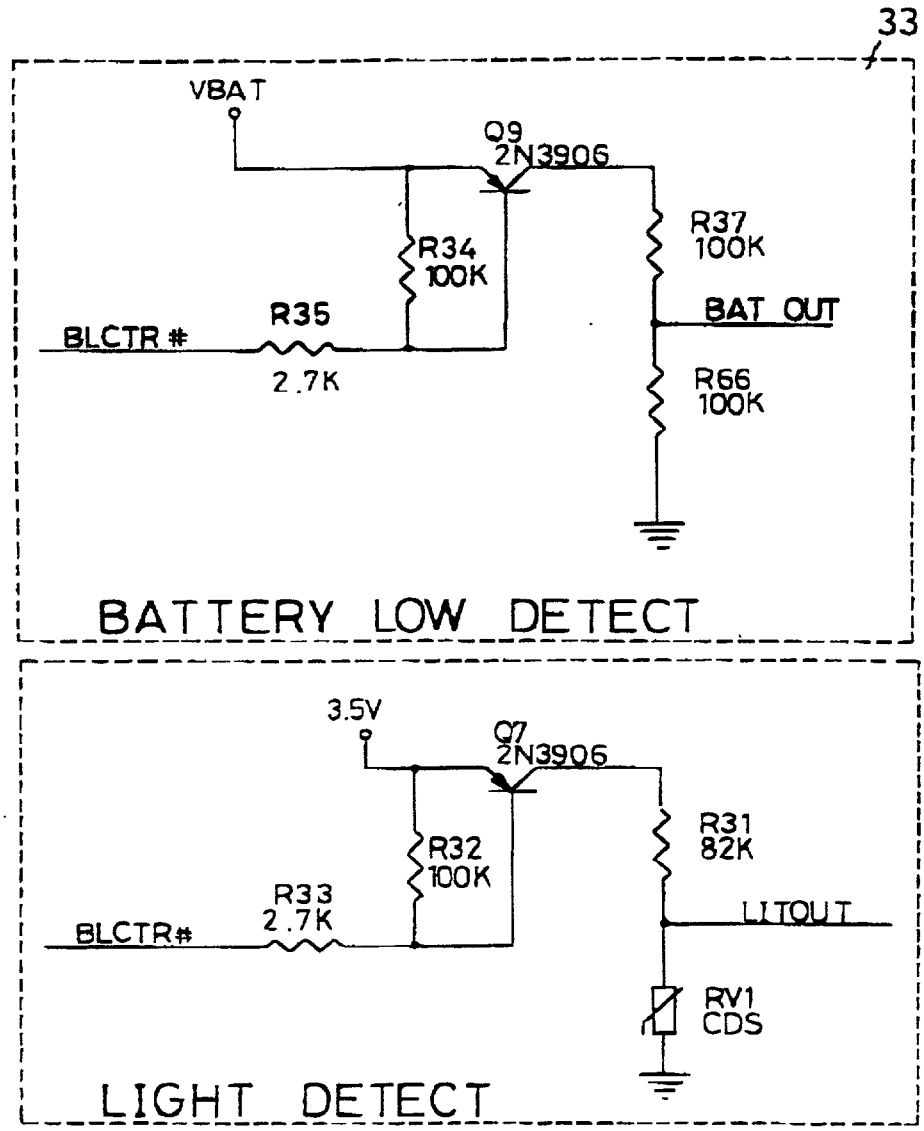
33
VBAT
Q9
2N3906
R34
100K
R37
100K
BAT OUT
R35
BLCTR #
2.7K
R66
100K
BATTERY LOW DETECT
3.5V
Q7
2N3906
R32
100K
R31
82K
R33
2.7K
BLCTR#
LITOUT
RV1
CDS
LIGHT DETECT

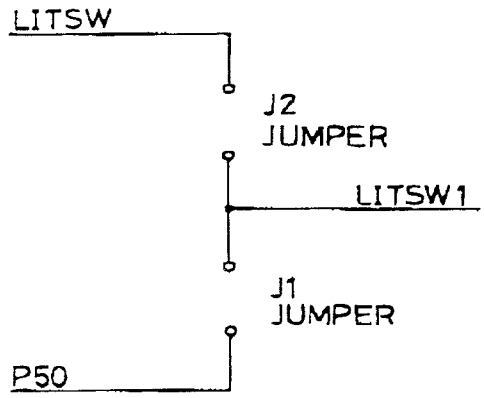
LITSW
J2
JUMPER
LITSW1
J1
JUMPER
P50

FIG.7E