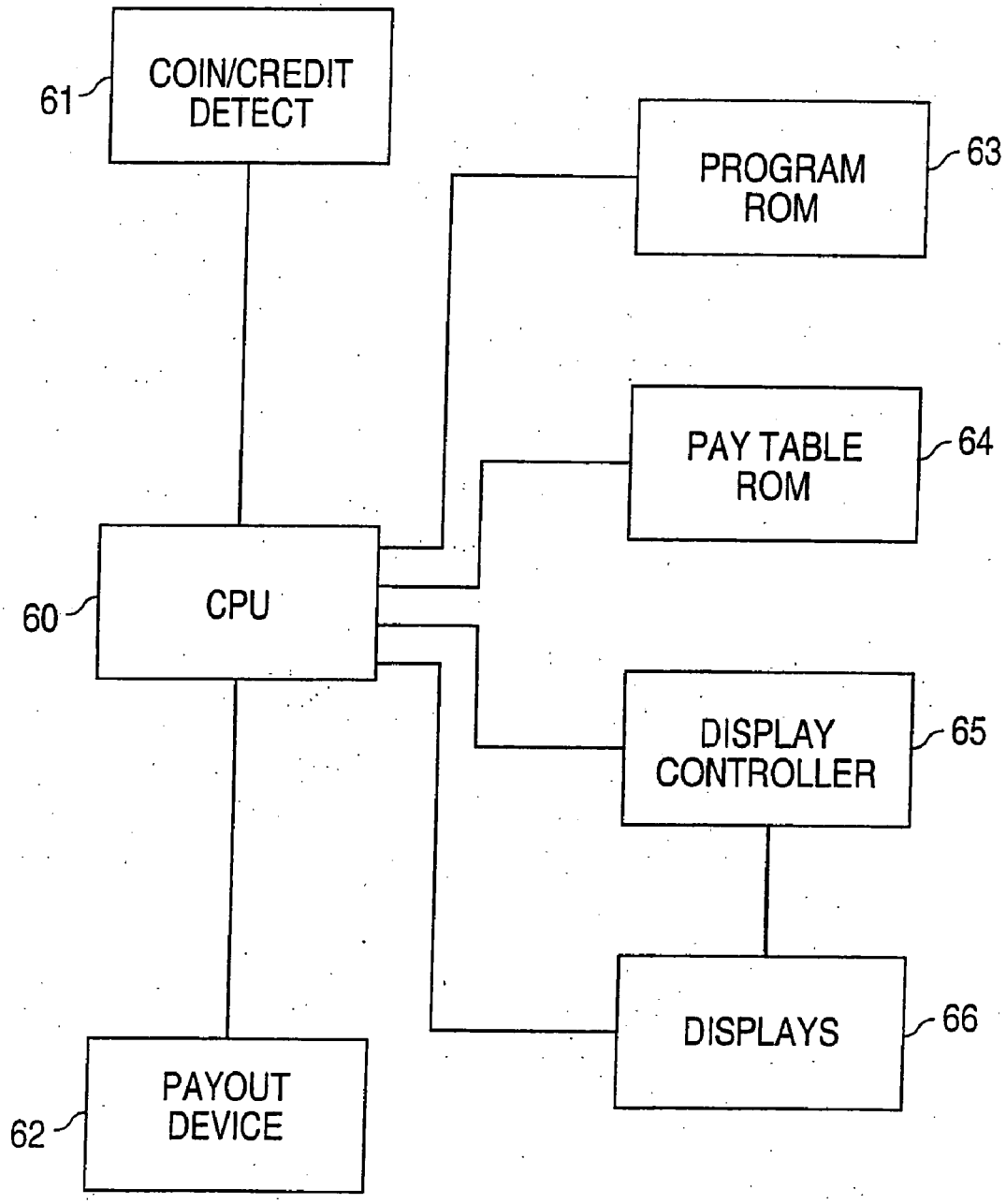
61
COIN/CREDIT DETECT
PROGRAM ROM
63
PAY TABLE ROM
64
60
CPU
DISPLAY CONTROLLER
65
DISPLAYS
66
62
PAYOUT DEVICE

FIG. 8