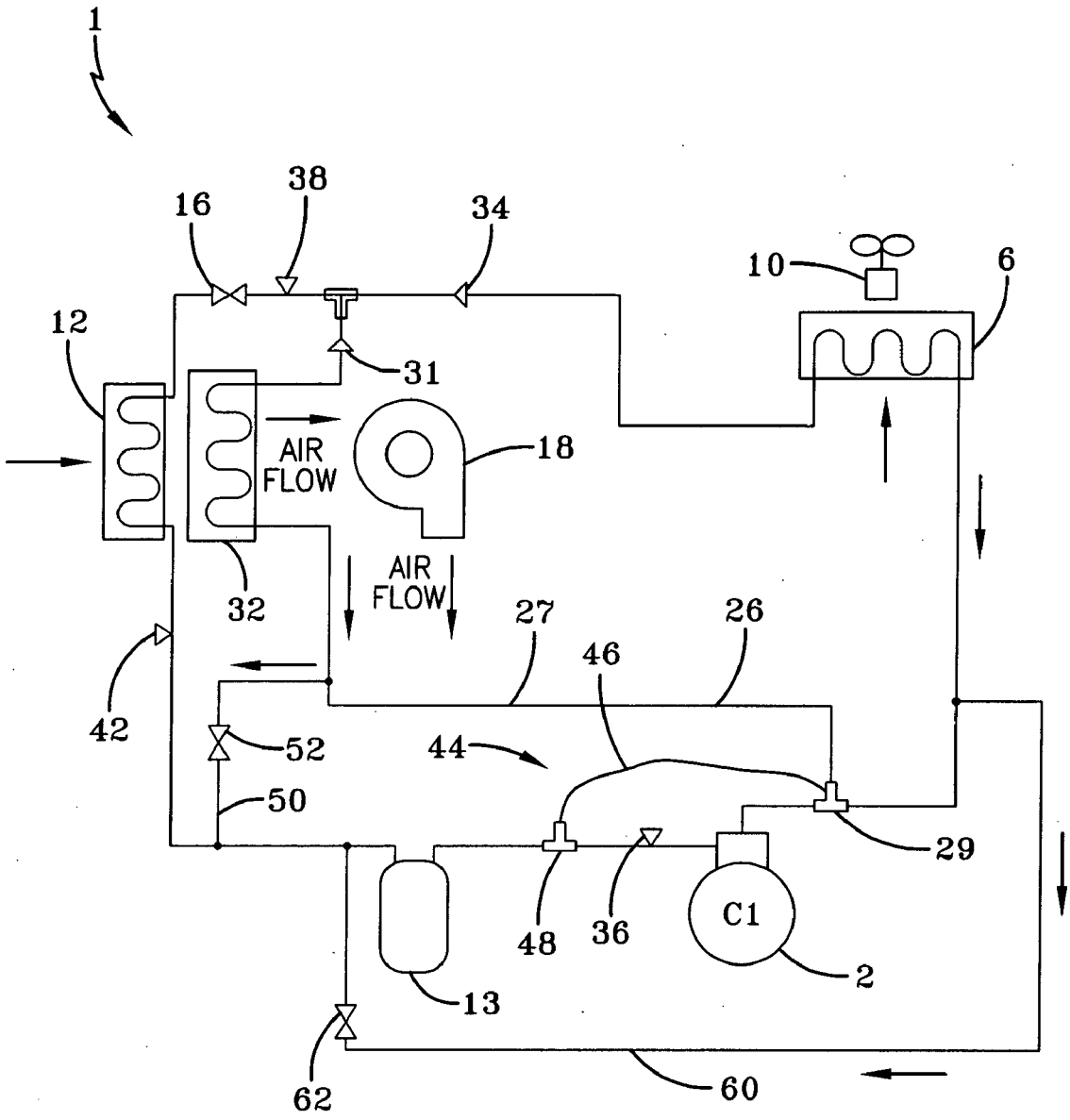

FIG-1
PRIOR ART