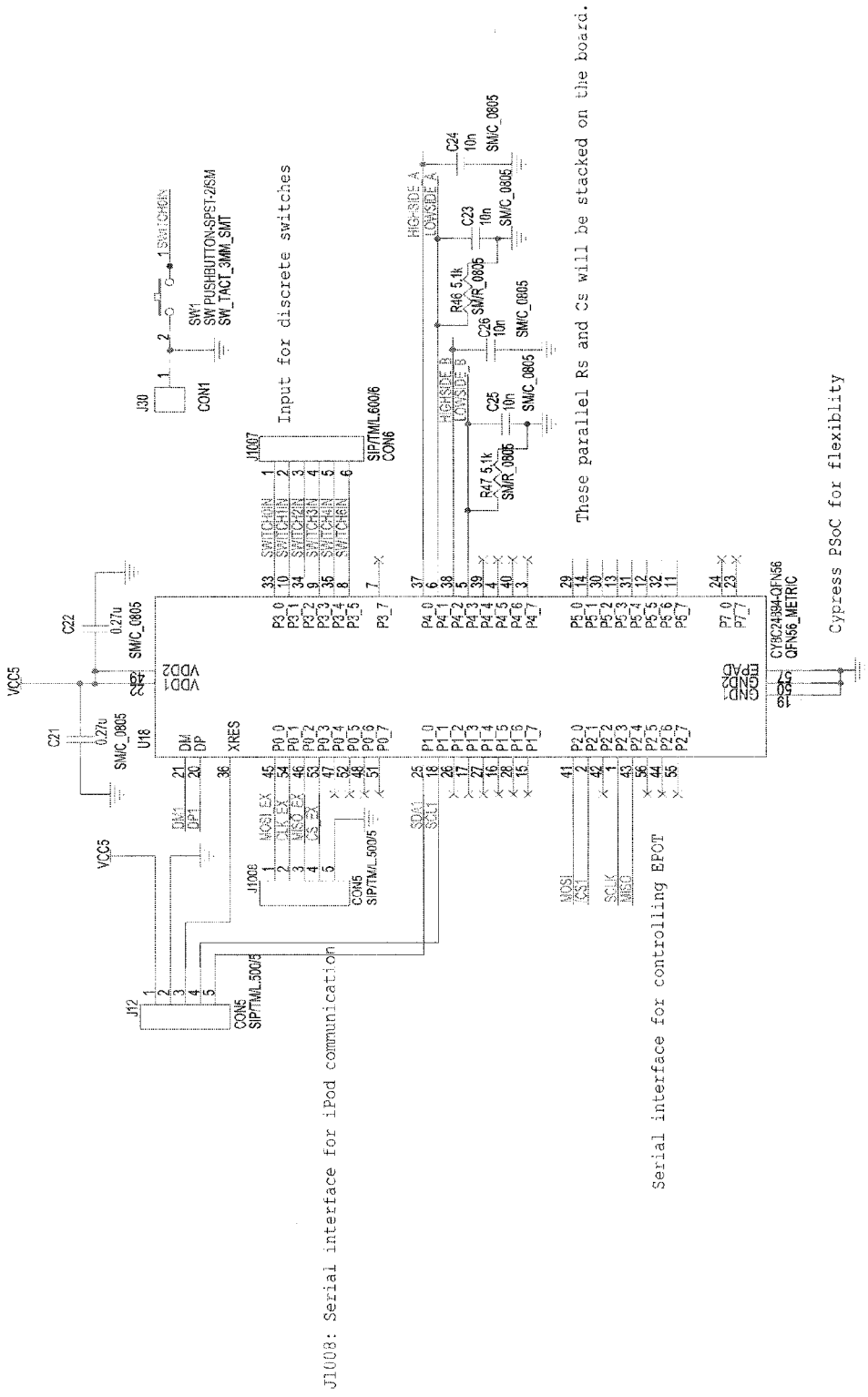
J1008: Serial interface for iPod communication
Serial interface for controlling EPOT
Input for discrete switches
These parallel Rs and Cs will be stacked on the board.
Cypress PSoC for flexiblity
U18
J12
J1008
J1007
J30
CON1
CON5
CON6
SW1
SW PUSHBUTTON-SPST-2/SM
SW_TACT_3MM_SMT
VCC5
VDD1
VDD2
GND1
GND2
EPAD
CY8C24394-QFN56
QFN56_METRIC
SIP/TML500/5
SIP/TML600/6
SM/C_0805
SM/R_0805
R46 5.1k
R47 5.1k
C21
C22
C23
C24
C25
C26
0.27u
10n
MOSI_EX
CLK_EX
MISO_EX
CS_EX
SDA1
SCL1
MOSI
CS1
SCLK
MISO
SWITCH0IN
SWITCH1IN
SWITCH2IN
SWITCH3IN
SWITCH4IN
SWITCH5IN
HIGHSIDE_A
LOWSIDE_A
HIGHSIDE_B
LOWSIDE_B

Fig. 4e