US 20130044215A1

(19) United States

(12) Patent Application Publication

ROTHKOPF et al.

(10) Pub. No.: US 2013/0044215 A1

(43) Pub. Date: Feb. 21, 2013

(54) **BI-STABLE SPRING WITH FLEXIBLE DISPLAY**

(75) Inventors: **Fletcher R. ROTHKOPF**, Los Altos, CA (US); **Derek W. WRIGHT**, San Francisco, CA (US); **Scott A. MYERS**, San Francisco, CA (US)

(73) Assignee: **Apple Inc.**, Cupertino, CA (US)

(21) Appl. No.: **13/212,045**

(22) Filed: **Aug. 17, 2011**

Publication Classification

(51) **Int. Cl.**

H04N 7/18 (2006.01)

G06F 3/041 (2006.01)

(52) **U.S. Cl.** **348/143**; 345/173; 348/E07.085

(57) **ABSTRACT**
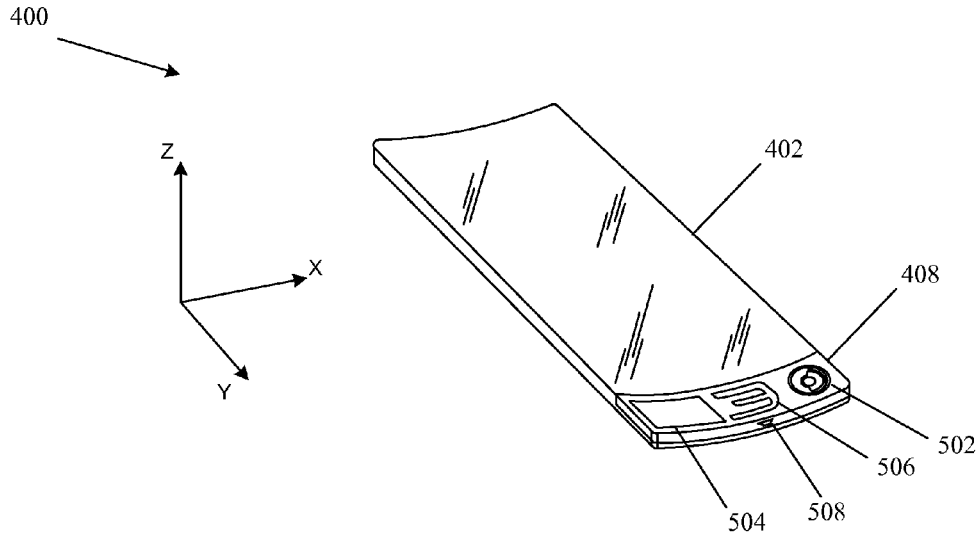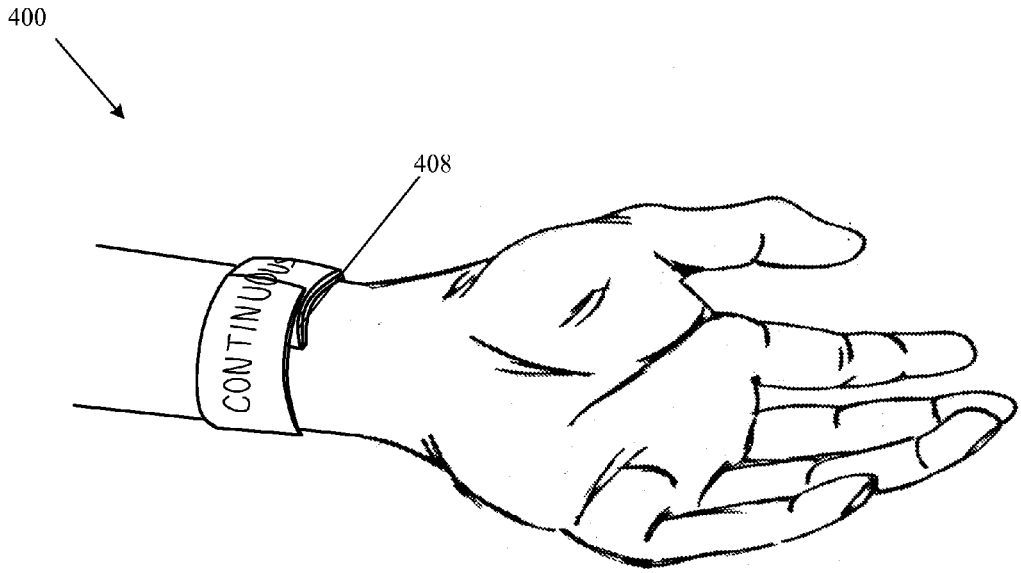
A wearable accessory device is disclosed. The wearable accessory device includes a flexible display coupled to a bi-stable spring. Coupling the display to the bi-stable spring allows the accessory device to be easily worn in a number of convenient locations.