FIG.4

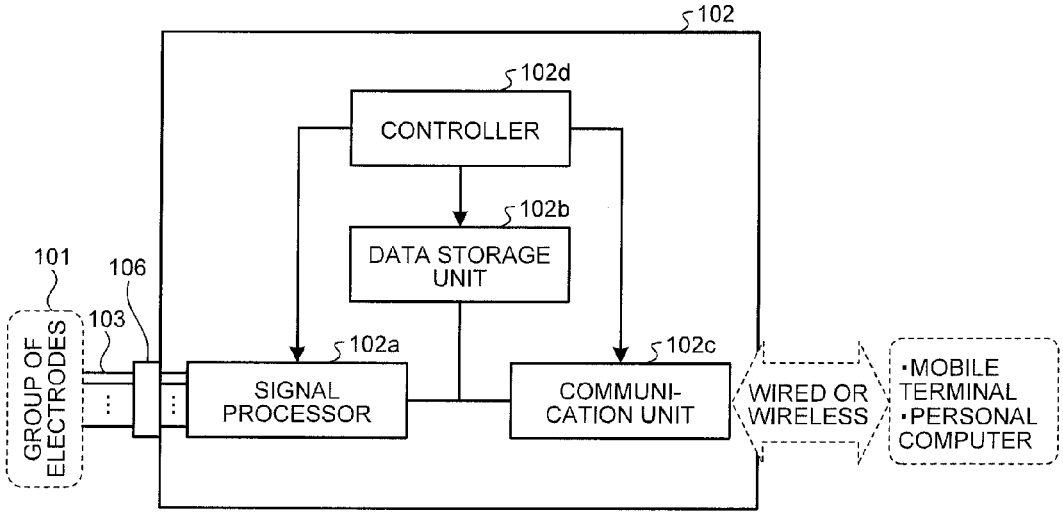
102
102d
CONTROLLER
102b
DATA STORAGE UNIT
101
106
103
GROUP OF ELECTRODES
102a
SIGNAL PROCESSOR
102c
COMMUNI-CATION UNIT
WIRED OR WIRELESS
•MOBILE TERMINAL
•PERSONAL COMPUTER