FIG. 6

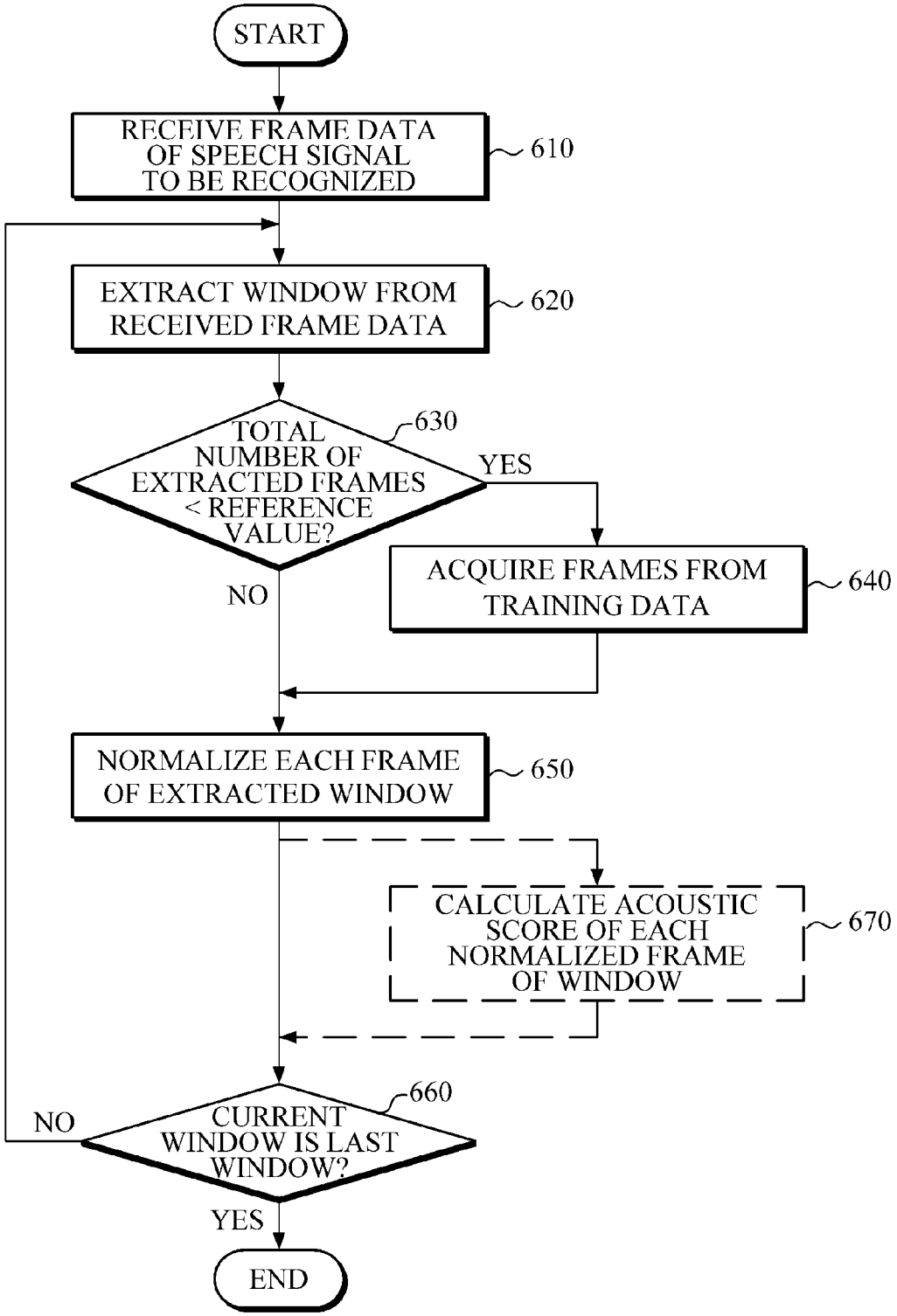
START
RECEIVE FRAME DATA OF SPEECH SIGNAL TO BE RECOGNIZED
610
EXTRACT WINDOW FROM RECEIVED FRAME DATA
620
TOTAL NUMBER OF EXTRACTED FRAMES < REFERENCE VALUE?
630
YES
NO
ACQUIRE FRAMES FROM TRAINING DATA
640
NORMALIZE EACH FRAME OF EXTRACTED WINDOW
650
CALCULATE ACOUSTIC SCORE OF EACH NORMALIZED FRAME OF WINDOW
670
CURRENT WINDOW IS LAST WINDOW?
660
NO
YES
END