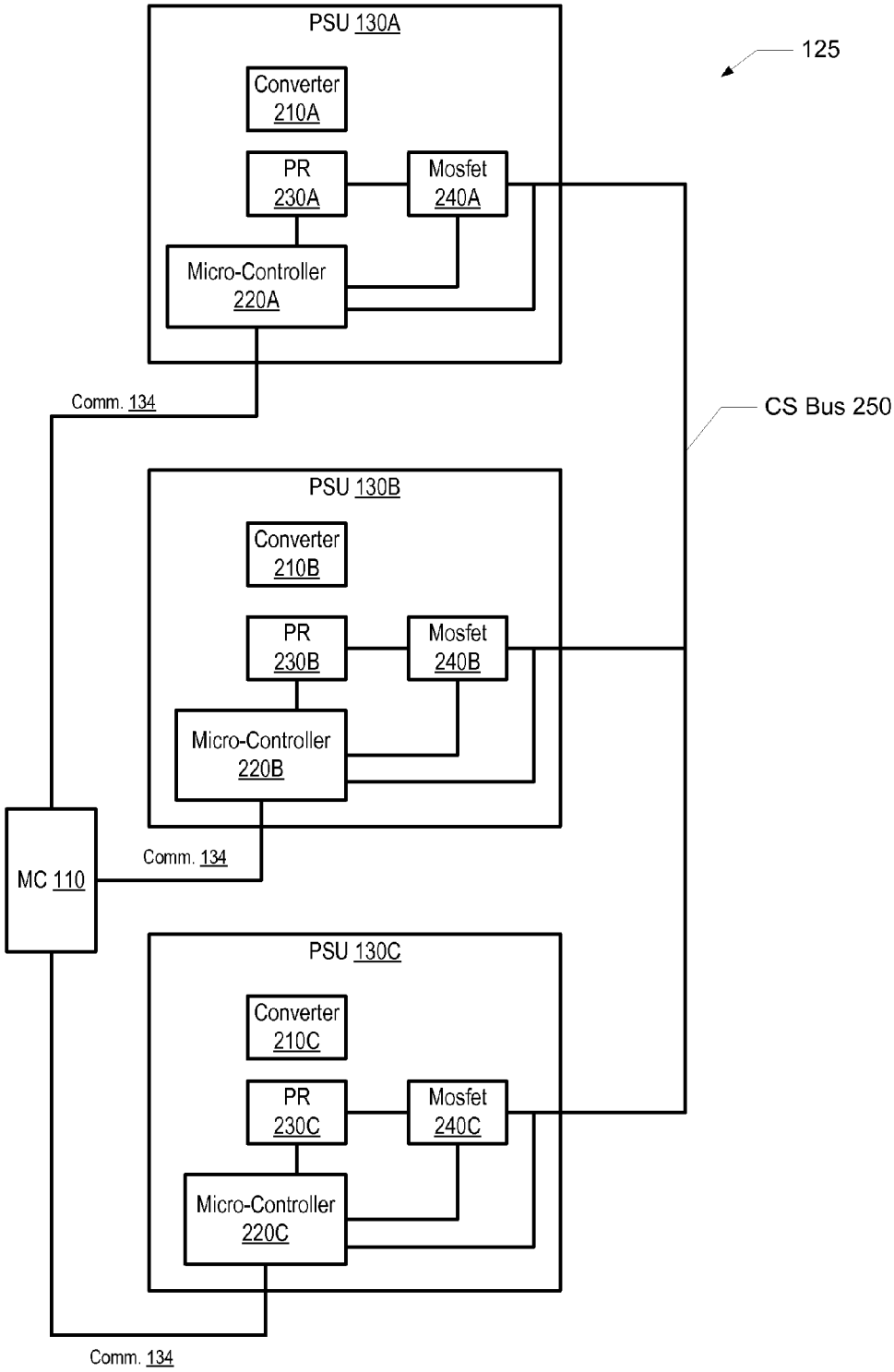
125
PSU 130A
Converter 210A
PR 230A
Mosfet 240A
Micro-Controller 220A
Comm. 134
CS Bus 250
PSU 130B
Converter 210B
PR 230B
Mosfet 240B
Micro-Controller 220B
MC 110
Comm. 134
PSU 130C
Converter 210C
PR 230C
Mosfet 240C
Micro-Controller 220C
Comm. 134

FIG. 2